DWG NO: 1992-85A

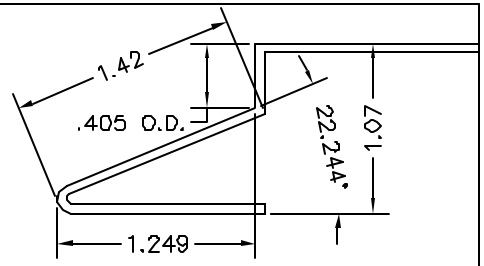


RAMP DETAIL

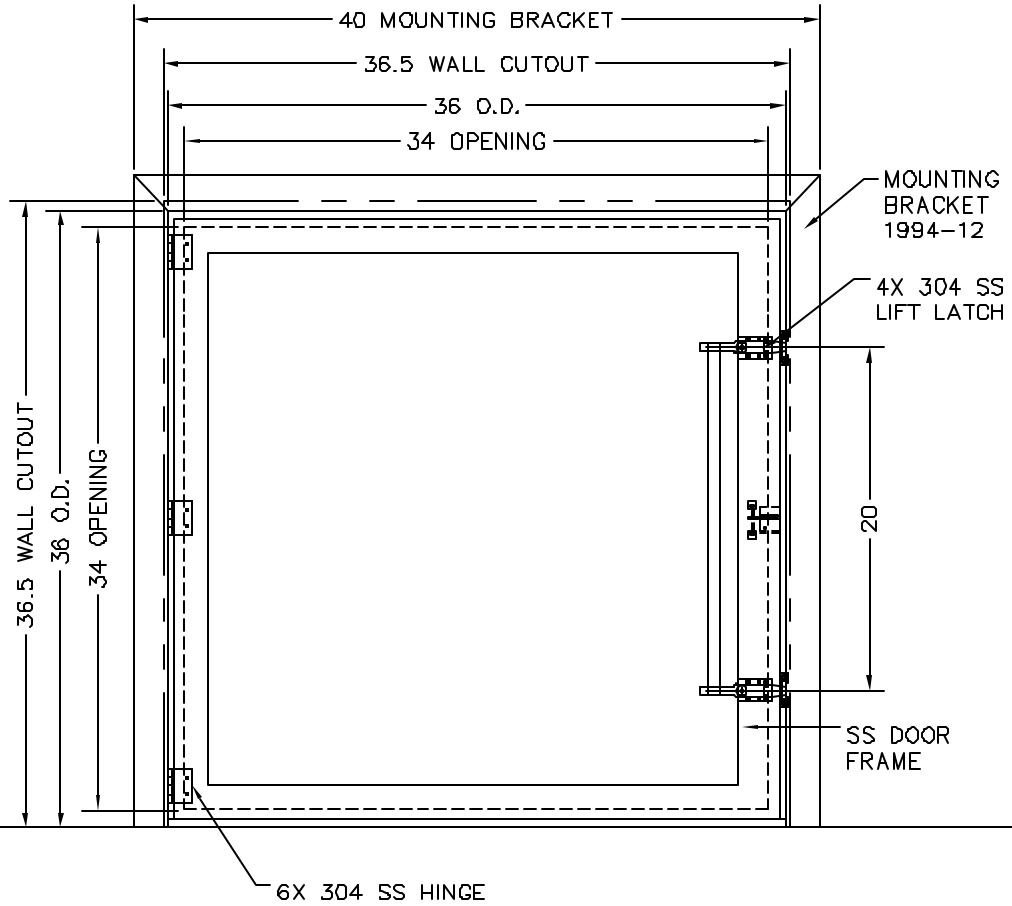


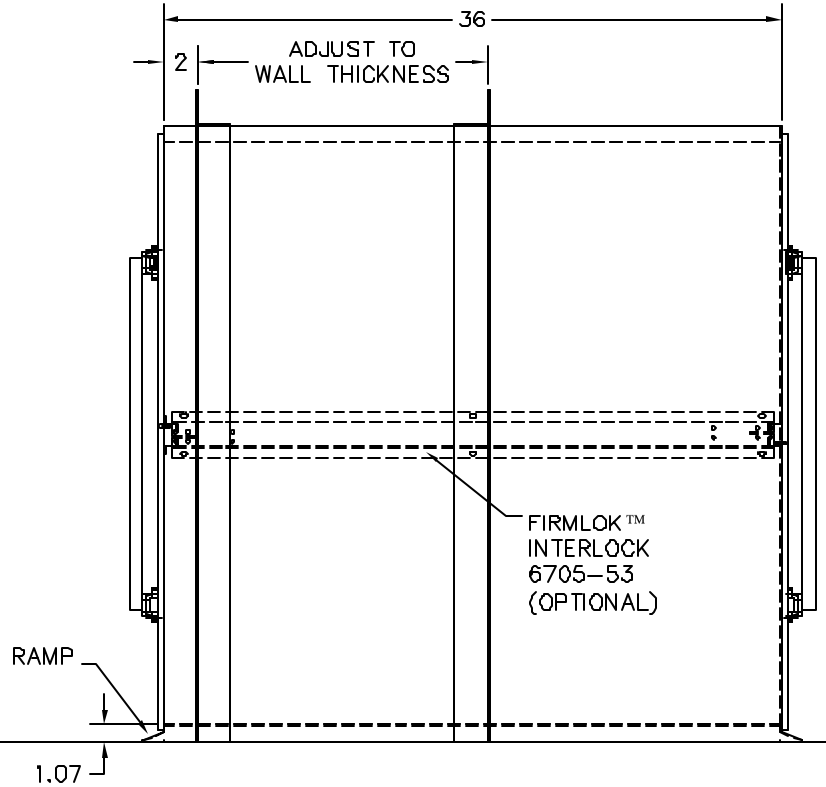


| LTR | DESCRIPTION | DATE | APPD |
|---|---|---|---|
| NC | INITIAL RELEASE | | |
| | | | |
| | | | |
| | | | |
| | | | |

| CONFIG | DESCRIPTION |
|---|---|
| MATERIAL SPEC. | FINISH SPEC. |
| 304 SS SDPVC | |

UNLESS OTHERWISE SPECIFIED, DIMENSIONS ARE IN INCHES

TOLERANCES ON:

.XX DECIMALS ± X°±

.XXX DECIMALS ± X/X ±

| SIGNATURES | | DATE |
|---|---|---|
| DRAWN: | JOSE SORIANO | 04.22.05 |
| ENGR: | MARIANO | 10-14-05 |

Terra Universal

PROPRIETARY & CONFIDENTIAL
ALL RIGHTS RESERVED BY
TERRA UNIVERSAL
DISCLOSURE OR COPYING PROHIBITED

TITLE CUSTOM PASS THROUGH, SS, FLOOR MOUNT 36" x 36" x 36"H

A 1992-85A

NEXT ASSY | USED ON | SCALE NONE | P/T | SHEET 1 OF 1