DWG NO: 1992-86A

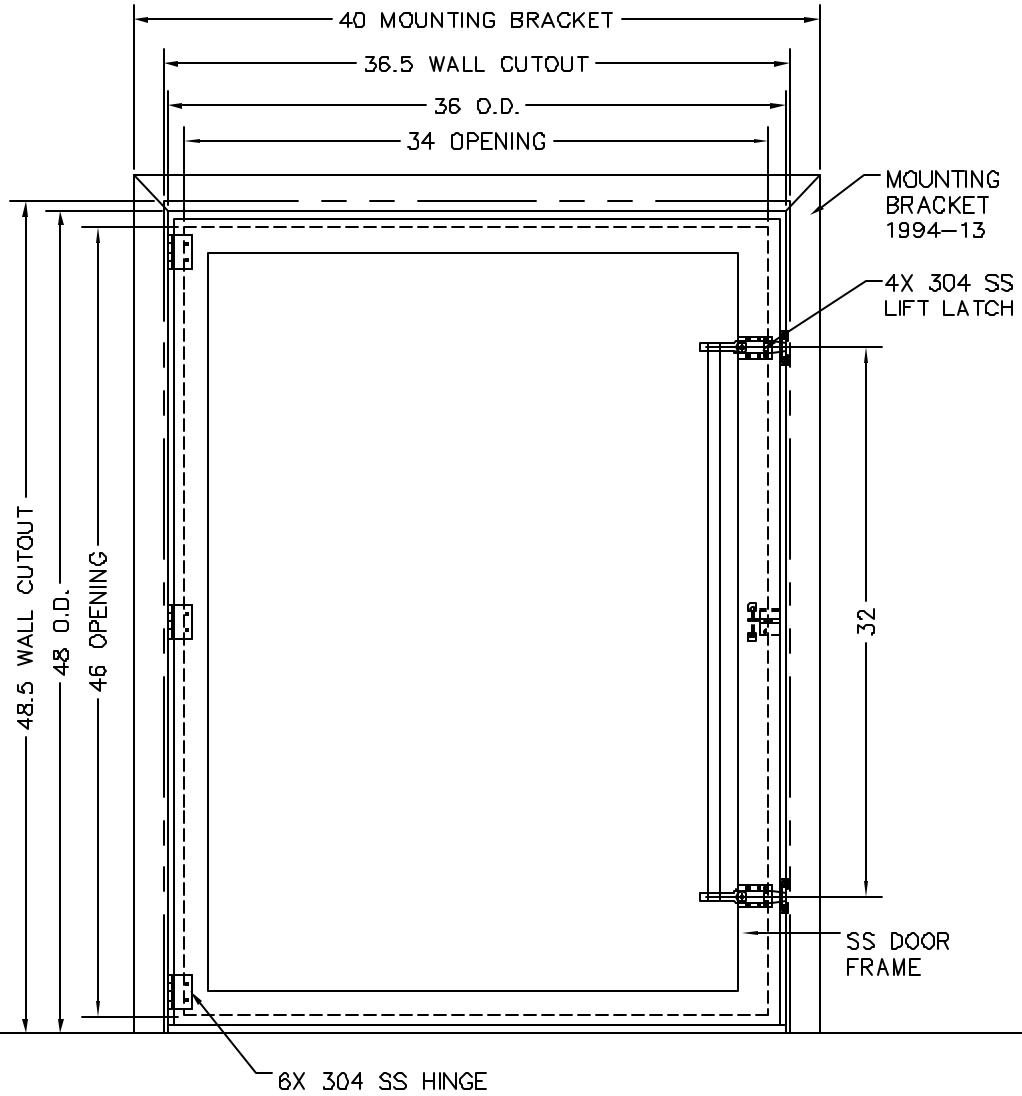

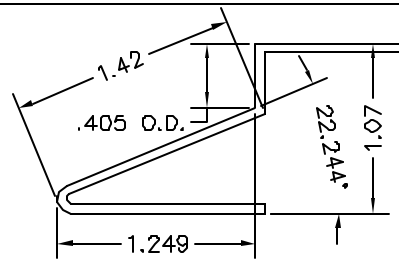

RAMP DETAIL

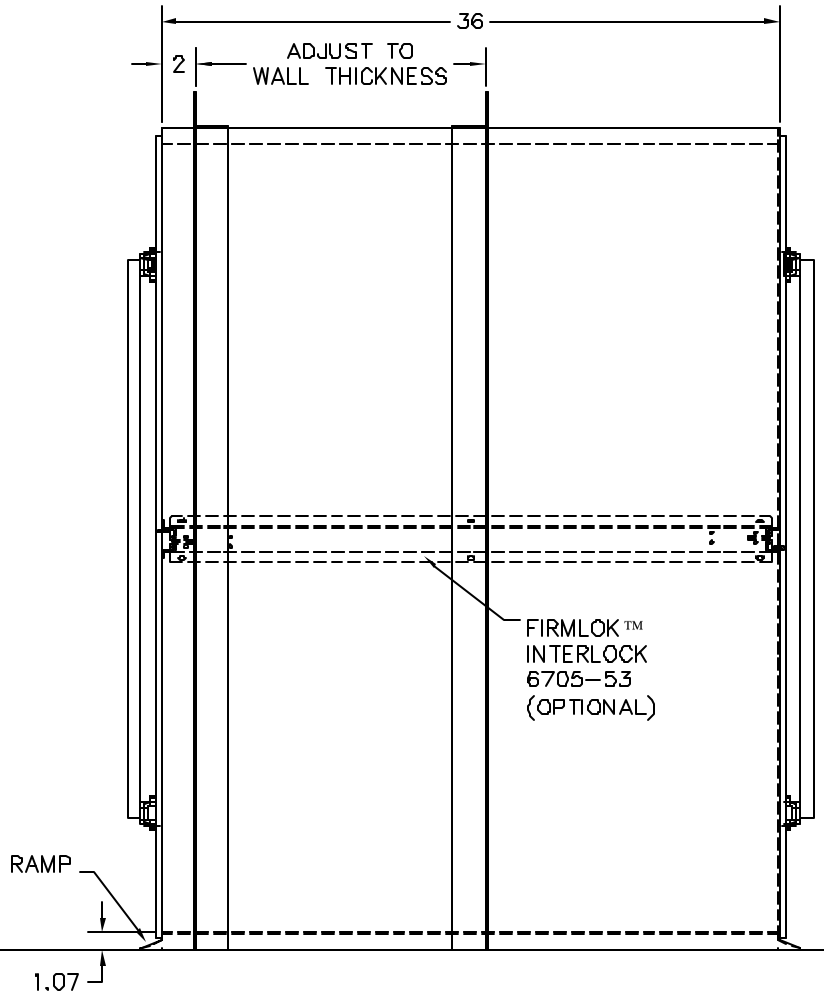

LTR	DESCRIPTION	DATE	APPD
NC	INITIAL RELEASE		
⬡			

CONFIG	DESCRIPTION
MATERIAL SPEC.	FINISH SPEC.
304 SS SDPVC	

UNLESS OTHERWISE SPECIFIED, DIMENSIONS ARE IN INCHES

TOLERANCES ON:

.XX DECIMALS ± X°±

.XXX DECIMALS ± X/X ±

SIGNATURES		DATE
DRAWN:	JOSE SORIANO	04.22.05
ENGR:	MARIANO	10-14-05

Terra Universal

PROPRIETARY & CONFIDENTIAL
ALL RIGHTS RESERVED BY
TERRA UNIVERSAL
DISCLOSURE OR COPYING PROHIBITED

TITLE CUSTOM PASS THROUGH, SS, FLOOR MOUNT 36" x 36" x 48"H

A 1992-86A

NEXT ASSY | USED ON | SCALE NONE | P/T | SHEET 1 OF 1