DWG NO: 1997-03A

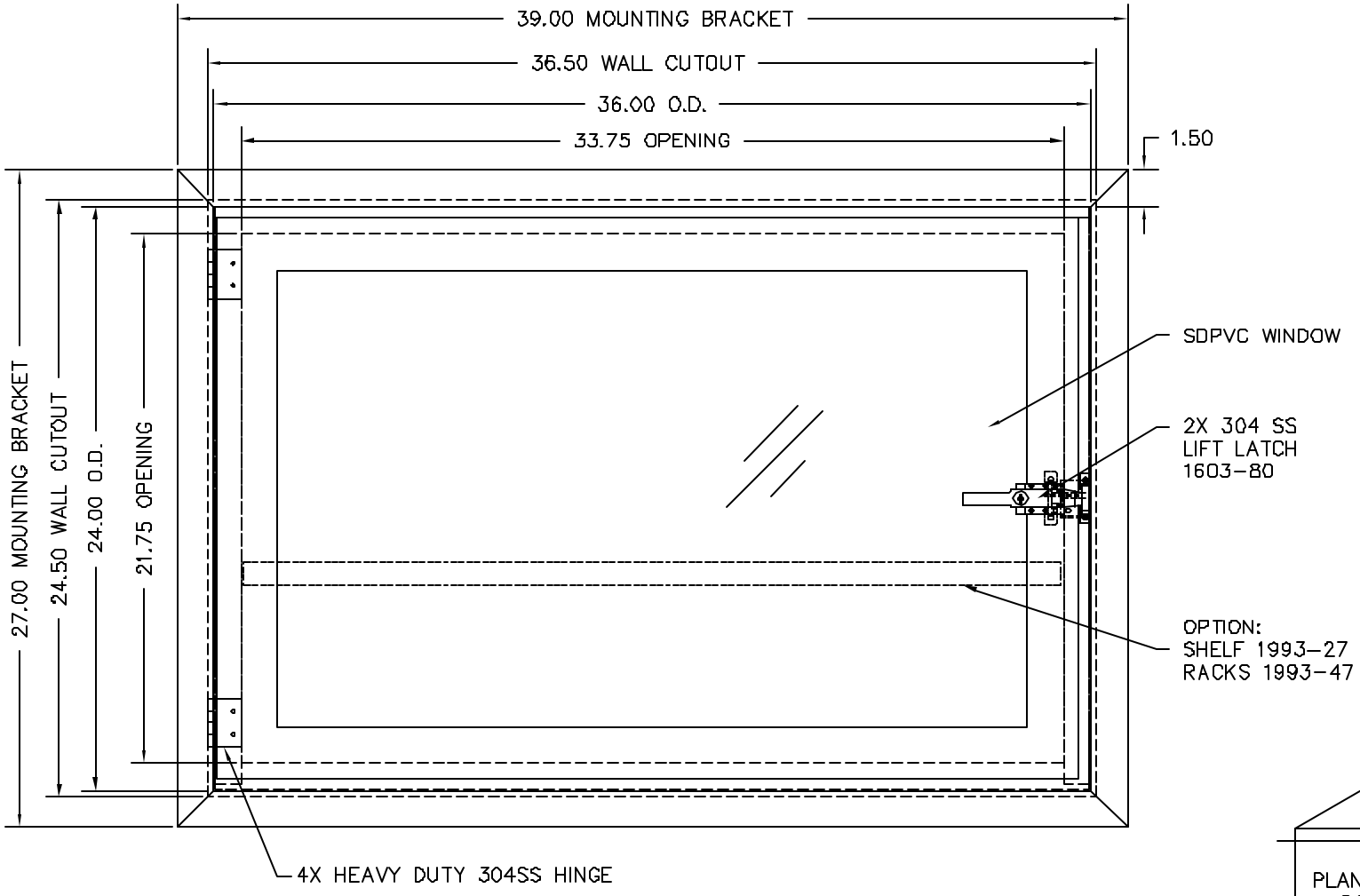

FRONT VIEW

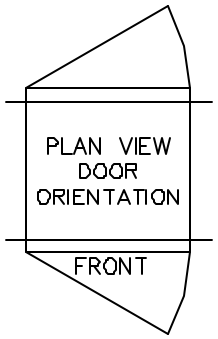

LTR	DESCRIPTION	DATE	APPD
NC	INITIAL RELEASE	04.08.01	EDT

CONFIG	DESCRIPTION
-1	

MATERIAL SPEC.	FINISH SPEC.
304 SS SDPVC	

UNLESS OTHERWISE SPECIFIED, DIMENSIONS ARE IN INCHES

TOLERANCES ON:

.XX DECIMALS ± X°±

.XXX DECIMALS ± X/X ±

SIGNATURES		DATE
DRAWN:	TUCKER	04.08.01
ENGR:		

Terra Universal

TITLE PASS THROUGH, 36"x36"x24" SS

A 1997-03A

NEXT ASSY | USED ON | SCALE NONE | PASS THROUGH | SHEET 1 OF 2

DWG NO: 1997-03A

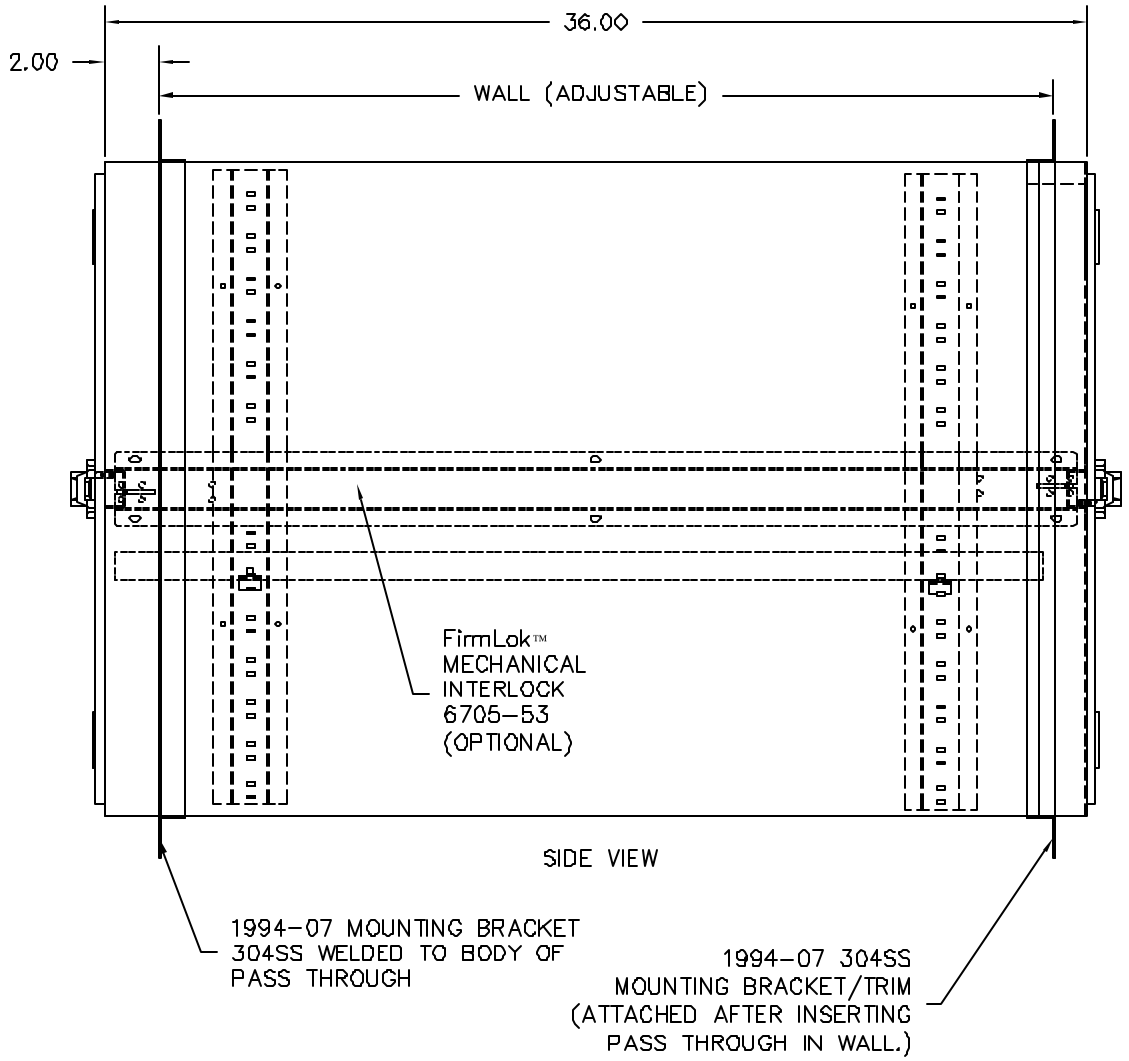

LTR	DESCRIPTION	DATE	APPD
NC	INITIAL RELEASE	04.08.01	EDT

CONFIG	DESCRIPTION
-1	

MATERIAL SPEC.	FINISH SPEC.
304 SS SDPVC	

UNLESS OTHERWISE SPECIFIED, DIMENSIONS ARE IN INCHES
TOLERANCES ON:
.XX DECIMALS ± X° ±
.XXX DECIMALS ± X/X ±

SIGNATURES		DATE
DRAWN:	TUCKER	04.08.01
ENGR:		

Terra Universal

TITLE: PASS THROUGH, 36"x36"x24" SS

A | 1997-03A

NEXT ASSY | USED ON | SCALE NONE | PASS THROUGH | SHEET 2 OF 2