DWG NO: 1992-25-51491

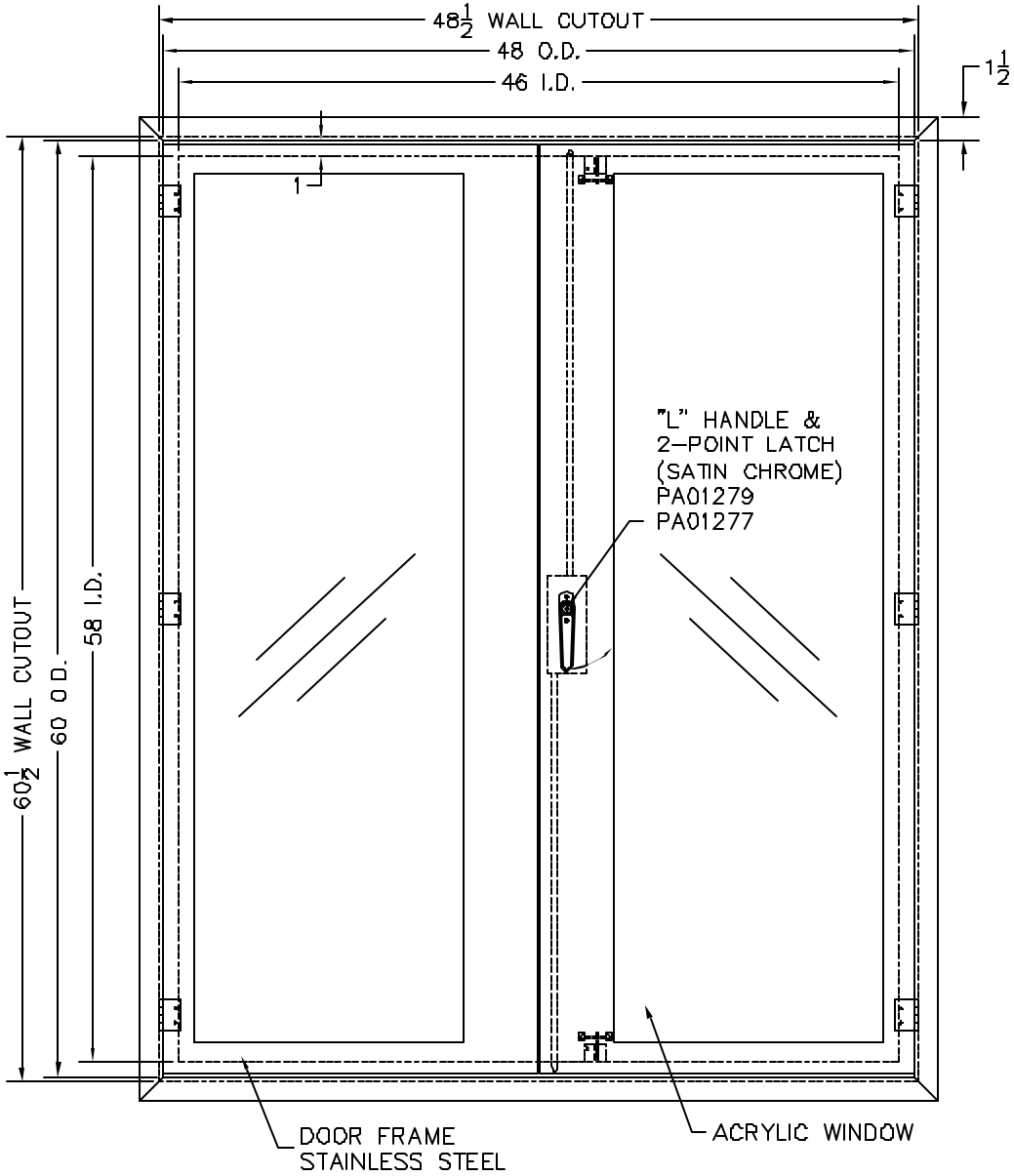

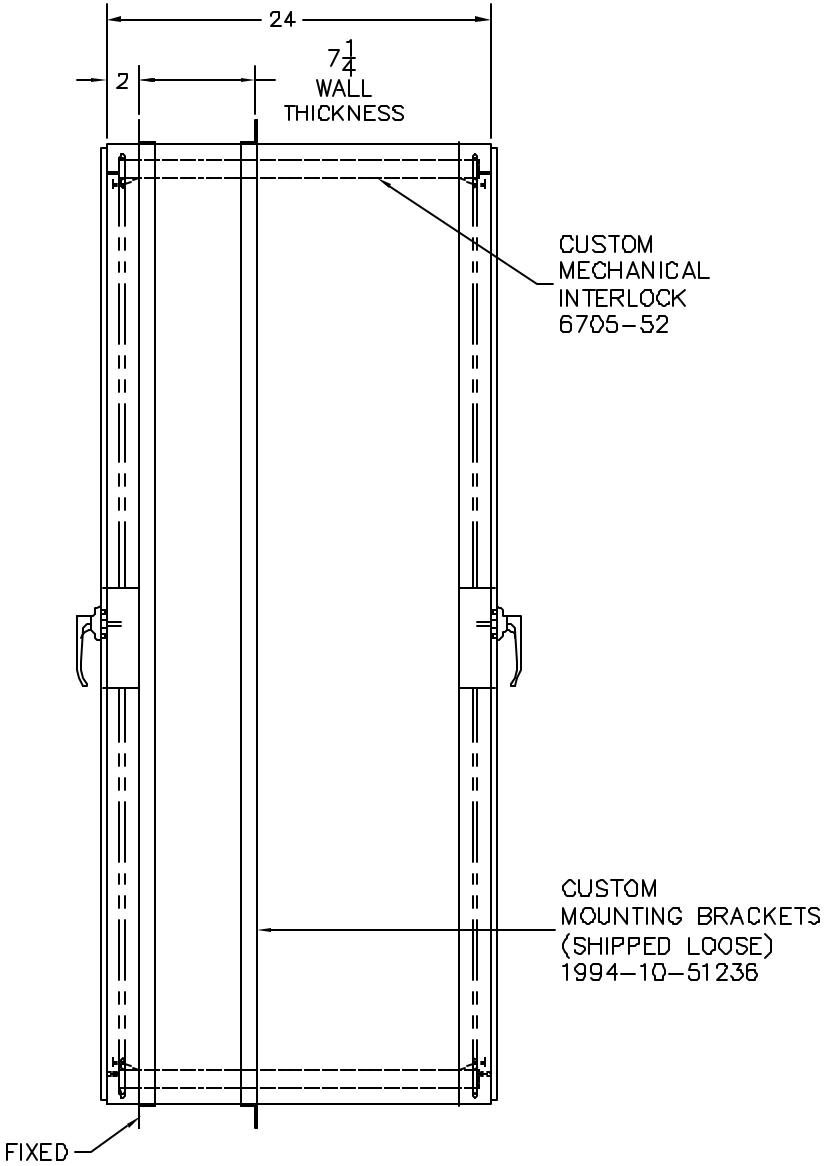

LTR	DESCRIPTION	DATE	APPD
NC	INITIAL RELEASE	01.20.06	EDT
A	CHGD DOORS	02.27.06	EDT

CONFIG	DESCRIPTION
MATERIAL SPEC.	FINISH SPEC
NONCONDUCTIVE LAMINATE	

UNLESS OTHERWISE SPECIFIED, DIMENSIONS ARE IN INCHES
TOLERANCES ON
.XX DECIMALS ± X°±
.XXX DECIMALS ± X/X ± 1/16

SIGNATURES		DATE
DRAWN:	TUCKER	01.20.06
ENGR:	TUCKER	

Terra Universal

PROPRIETARY & CONFIDENTIAL
ALL RIGHTS RESERVED BY
TERRA UNIVERSAL
DISCLOSURE OR COPYING PROHIBITED

TITLE
CUSTOM PASS-THROUGH
NONC. LAMINATE, W/MOUNT
48"Wx24"Dx60"H

NEXT ASSY	USED ON	SCALE		
	131643	NONE	P/T	SHEET 1 OF 1

A 1992-25-51491