- Built from high-grade 304 and 316 stainless steel, the Stainless Steel Multi Tool Lift delivers maximum corrosion resistance in environments subject to harsh chemicals and frequent washdowns
- Adapts to your facility's evolving needs with interchangeable configurations, making it a single versatile solution for a wide range of material handling tasks
- A lowered fork height of just 2" allows the lift to slide effortlessly beneath loads, minimizing manual handling in tight spaces
- Boasting a lift height of up to 65", it provides ample reach for a wide range of applications
- The integrated remote hand pendant gives operators complete control over lift function



Features
- 325lbs capacity
- Lowered height: 2" with forks
- Raised height: 65"
- Remote hand pendant control
- Electropolished

Options
- Dumper
- Platform
- Forks
- Side Rotator
- Post
- Jib Crane
- Basket Loader
- Roll Handler

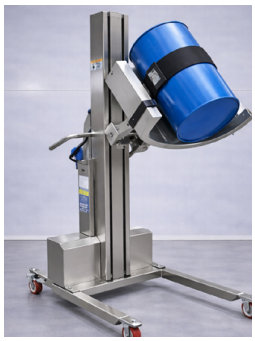
DUMPER


PLATFORM


FORK


SIDE ROTATOR TILTER


POST


JIB CRANE


BASKET LOADER


ROLL HANDLER

Terra Universal, Inc. • TerraUniversal.com • 800 S. Raymond Ave. Fullerton, CA 92831 USA • TEL: +1-714-578-6000 FAX: +1-714-578-6020

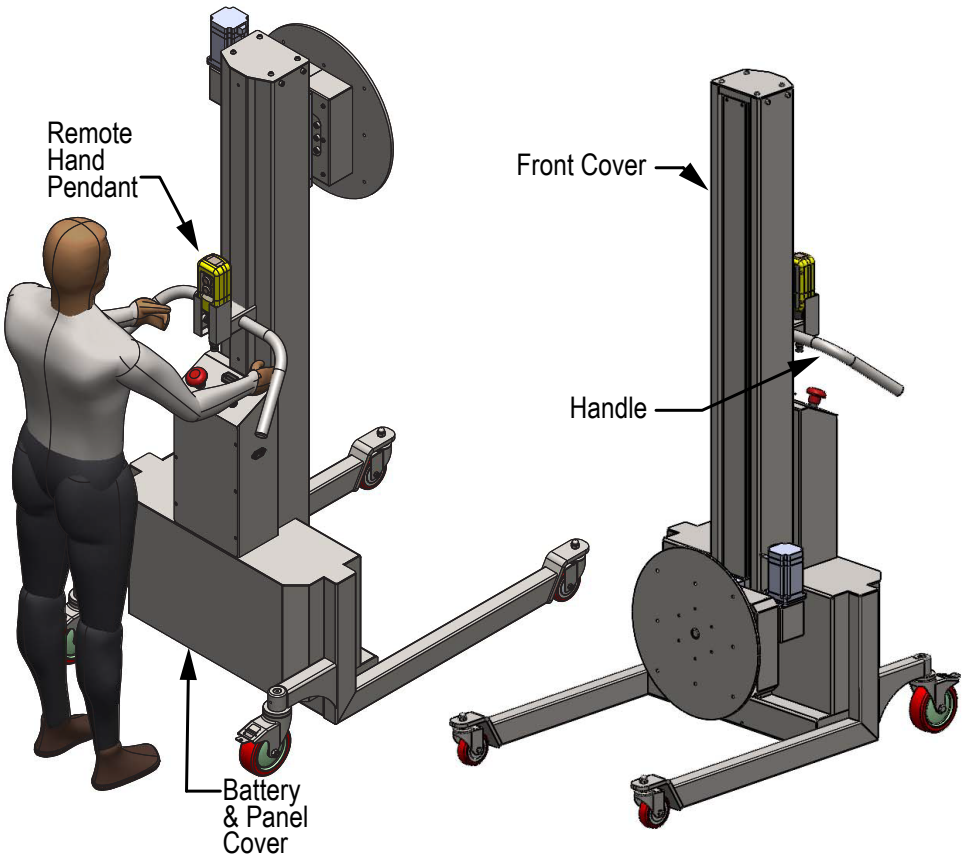

*Other Sizes Availables

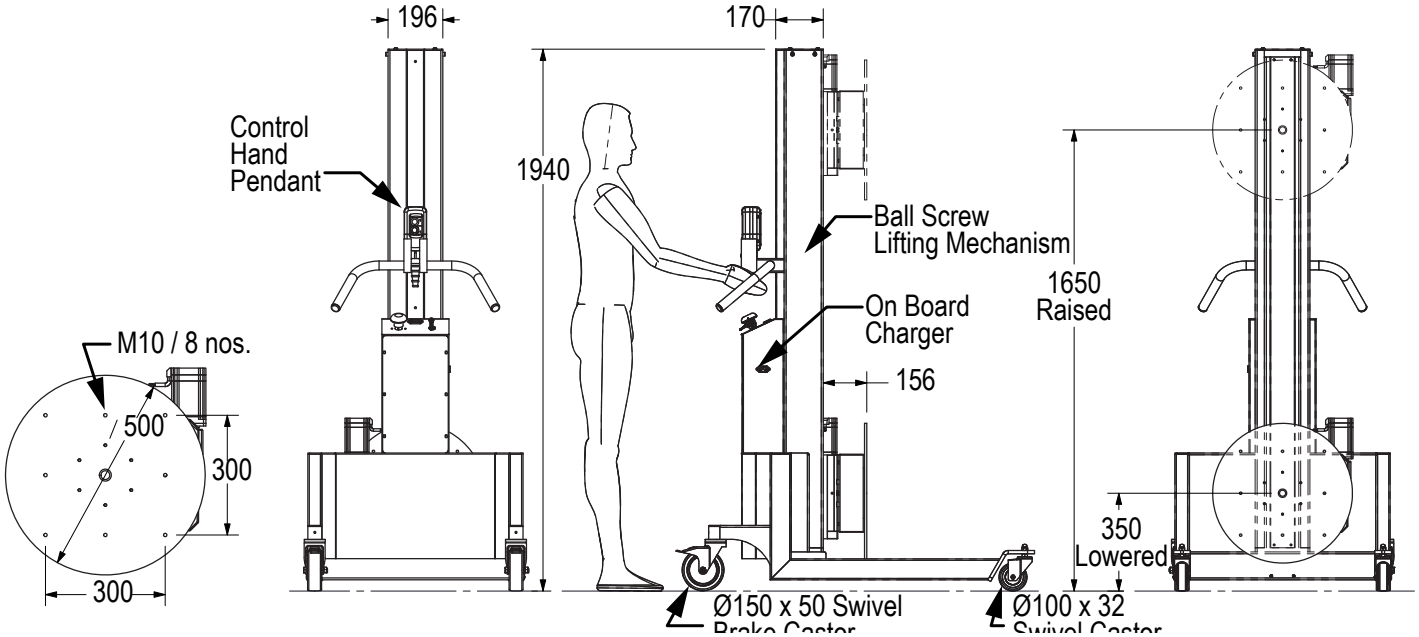

Terra Universal, Inc. • TerraUniversal.com • 800 S. Raymond Ave. Fullerton, CA 92831 USA • TEL: +1-714-578-6000 FAX: +1-714-578-6020