ASI DOORS

Single Sliding U.L. Rated Fire Door MODEL 255

PART'S MANUAL

Instructions for Ordering

This parts manual is intended to assist in the correct identification of the more commonly replaced parts; covering, generally, all models and styles offered within the marathon pharm. Line. The manual will also help identify obsolete parts, part design changes and current production parts. For more specific parts information, please contact an authorized representative or consult the factory's customer service or engineering departments. Asi doors reserves the right to discontinue any part and make design changes without notice.

General Instructions for Ordering Door Parts

Accurate information is always necessary to serve you correctly and promptly. Several steps should be followed to determine exactly the parts that are needed.

Refer to the information tag on your door and record the:

1. Door model number
2. Job number
3. Door number
4. Manufacturing date.

Use part numbers referenced in this manual.

If the item is not found in the manual, the product code on the back of the item is helpful.

If your door has no information label, the approximate purchase date is helpful.

Call

1-800-558-7068

or visit

asidoors.com/parts

to order parts

Manual Part #: 17A208

Door Identification

Determining the Job Number, Model and Year of Manufacture of your door is necessary to provide quick and accurate parts identification. The following is a description of labels and their locations.

When ordering parts, specify Job Number, Door Number and Manufacture Date

Product Labels:

Manual Doors

ASI Doors, Inc.

MILWAUKEE WISCONSIN MADE IN USA

DOOR MODEL | JOB NUMBER | DOOR NUMBER

MFG. DATE | INSPECTED BY

Power Doors

ASI Doors, Inc.

MILWAUKEE WISCONSIN MADE IN USA

DOOR MODEL | JOB NUMBER | DOOR NUMBER

MFG. DATE | INSPECTED BY

OPERATOR TYPE | MODEL # | WIRING DIAGRAM

HORSEPOWER | VOLTAGE/PHASE | HZ | AMPERAGE

ID Tag Location

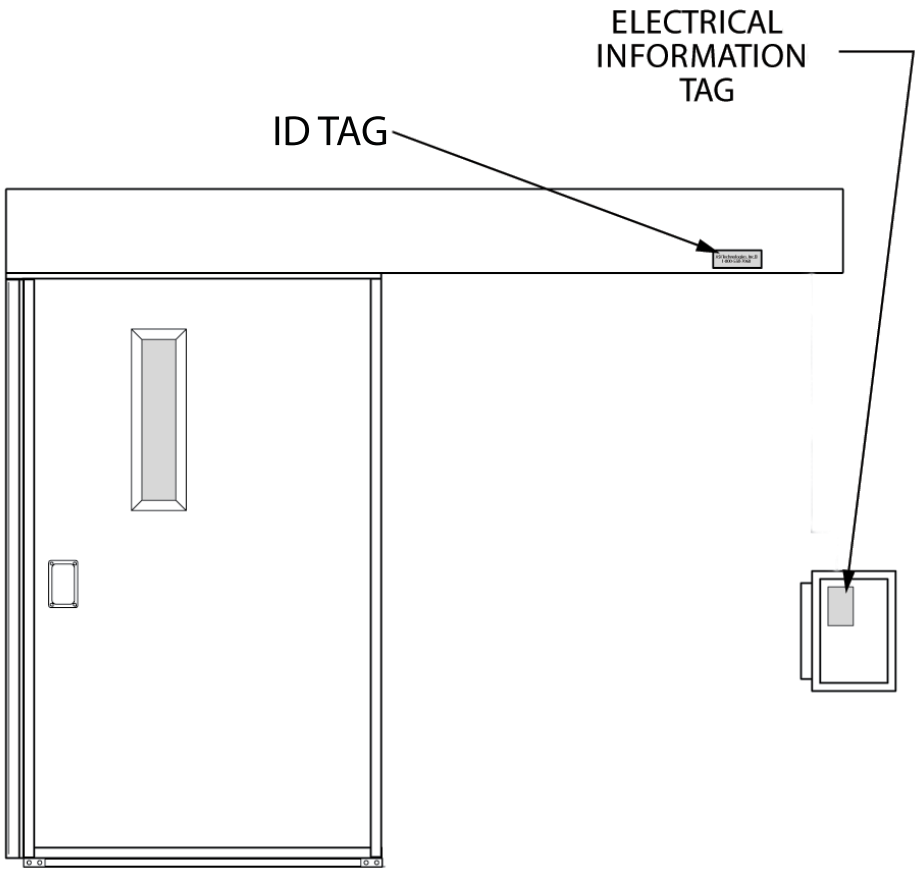

REPLACEMENT PARTS

Door Panel Assembly

86D430F3, Power, RH
86D430F4, Power, LH

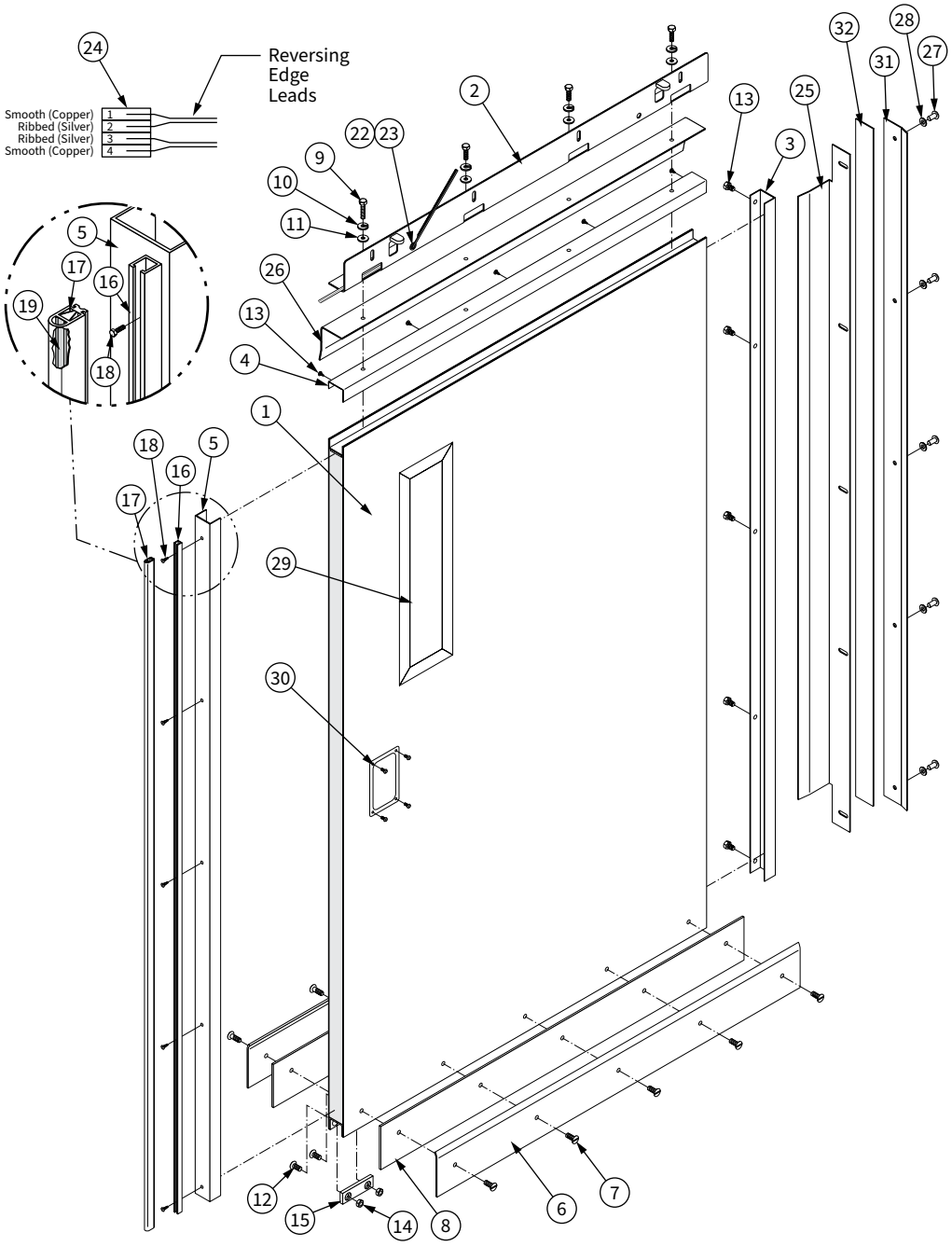

When ordering parts, specify Job Number, Door Number and Manufacture Date

REPLACEMENT PARTS

Door Panel Assembly Continued

86D430F3, Power, RH
86D430F4, Power, LH

Item	Part #	Descritption
1	32D523F1	Door fabrication, S/S, RH, no window
-	32D523F2	Door fabrication, S/S, LH, no window
-	32D523F3	Door fabrication, S/S, RH, 4” × 25” window
-	32D523F4	Door fabrication, S/S, LH, 4” × 25” window
-	32D523F5	Door fabrication, S/S, RH, 10” × 10” window
-	32D523F6	Door fabrication, S/S, LH, 10” × 10” window
-	32D523F7	Door fabrication, galvanized, RH, no window
-	32D523F8	Door fabrication, galvanized, LH, no window
-	32D523F9	Door fabrication, galvanized, RH, 4” × 25” window
-	32D523F10	Door fabrication, galvanized, LH, 4” × 25” window
-	32D523F11	Door fabrication, galvanized, RH, 10” × 10” window
-	32D523F12	Door fabrication, galvanized, LH, 10” × 10” window
-	Consult Factory	Door fabrication, other specials
2	28D161F3	Weldment, roller truck, lower, fire
3	13C381F1	Capping, side, trailing edge, S/S
-	13C381F2	Capping, side, trailing edge, galvanized
4	13C382F1	Capping, top, S/S
-	13C382F2	Capping, top, galvanized
5	13D183F1	Capping, side, leading edge, S/S
-	13D183F2	Capping, side, leading edge, galvanized
6	21B182F1	Retainer, sill gasket, S/S
-	21B182F2	Retainer, sill gasket, galvanized
7	41A466	Screw, 1/4”–20 × .63”, PHL FHMS, S/S
8	15A019F3	Sill gasket, .045 × 41/4” × (WIC + 8.00)
9	41A719	Screw, 3/8”–16 × 2.25”, F/T, HHCS, S/S
10	41A327	Washer, lock, 3/8”, S/S
11	41A203	Washer, flat, 3/8”, S/S
12	41A141	Screw, #10–24 × .50” PHL FHMS, S/S
13	41A618	Screw, #10–24 × .50” PHL PHMS, S/S
14	41A716	Nut, #10–24, hex, SS
15	14A176	Block, cam
16	11B100	Track, reversing edge, L = HIC + 3”
17	11B099	Extrusion, reversing edge, L = HIC + 3”
18	41A024	Screw, #8 × 3/4”, FHSMS
19	24A011	Switch, tape, reversing edge, L = HIC – 3”
20	12B769F1	Shim, squaring, .06” × 1.88” × 96.00”
21	12B769F2	Shim, squaring, .13” × 1.88” × 96.00”
22	11A126	Grommet, rubber
23	11A128	Grommet, rubber
24	22A202–2	Connector, 4 position, .156 MTA, red
25	13C384F1	Bracket, hold-in, trailing edge, RH, S/S
-	13C384F2	Bracket, hold-in, trailing edge, LH, S/S
-	13C384F3	Bracket, hold-in, trailing edge, RH, galvanized
-	13C384F4	Bracket, hold-in, trailing edge, LH, galvanized
26	13C385F1	Bracket, hold-in, top, S/S
-	13C385F2	Bracket, hold-in, top, galvanized
27	41A149	Screw, 1/4”–20 × .625”, SL THMS, S/S
28	41A195	Washer, flat, 1/4”, standard, S/S
29	Consult Factory	Window
30	Consult Factory	Handle
31	13B775	Retainer, gasket
32	15A019F1	Gasket, .045” × 2” × HIC

When ordering parts, specify Job Number, Door Number and Manufacture Date

Header Assembly & Shrouds

81D495F1, 0° RH
81D495F2, 0° LH
81D495F3, 30° RH
81D495F4, 30° LH
81D495F5, 45° RH
81D495F6, 45° LH

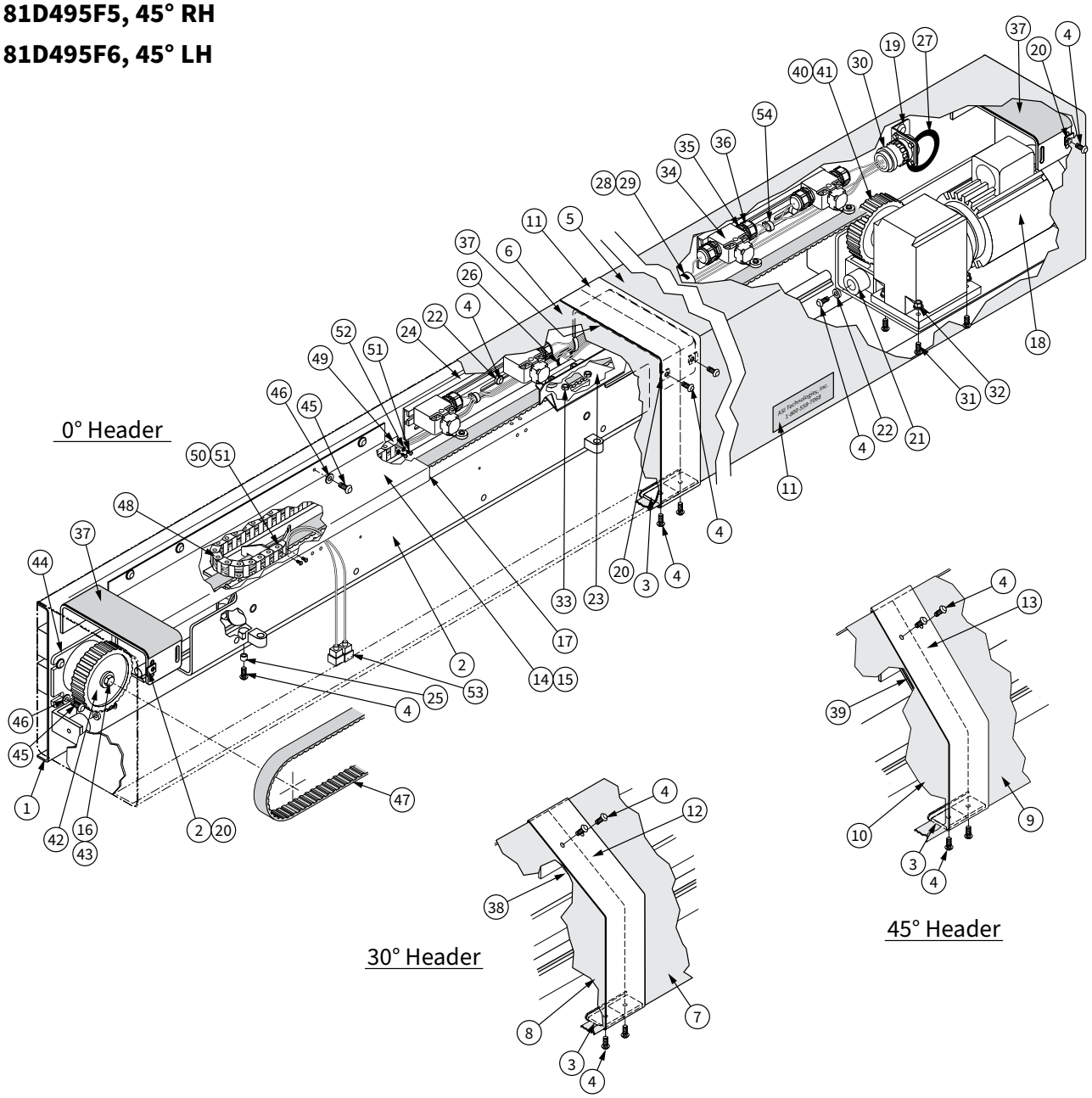

When ordering parts, specify Job Number, Door Number and Manufacture Date

REPLACEMENT PARTS

Header Assembly & Shrouds Continued

81D495F1, 0° RH
81D495F2, 0° LH
81D495F3, 30° RH
81D495F4, 30° LH
81D495F5, 45° RH
81D495F6, 45° LH

When ordering parts, specify Job Number, Door Number and Manufacture Date

Item	Part #	Descritption
1	28D176F1	Weldment, header, single slide, 0°, RH
-	28D176F2	Weldment, header, single slide, 0°, LH
-	28D176F3	Weldment, header, single slide, 30, RH
-	28D176F4	Weldment, header, single slide, 30°, LH
-	28D176F5	Weldment, header, single slide, 45°, RH
-	28D176F6	Weldment, header, single slide, 45°, LH
2	31D109F1	Assembly, upper truck, power, SS, RH
-	31D109F2	Assembly, upper truck, power, SS, LH
3	13A420	Plate, shroud splice
4	41A535	Screw, 1/4”–20 × .625”, BU/HHC, SS
5	28D173F1	Weldment, shroud, 0°, power, RH, SS
6	28D173F2	Weldment, shroud, 0°, power, LH, SS
7	28D174F1	Weldment, shroud, 30°, power, RH, SS
8	28D174F2	Weldment, shroud, 30°, power, LH, SS
9	28D175F1	Weldment, shroud, 45°, power, RH, SS
10	28D175F2	Weldment, shroud, 45°, power, LH, SS
11	13C198	Cover, trim, 0°, power, SS
12	13C199	Cover, trim, 30°, power, SS
13	13C200	Cover, trim, 45°, power, SS
14	13D259	Guide, E–chain, SS
15	13D260	Guide, E–chain, SS
16	10A010	Loctite
17	10A023	Tape, UHMW, 2” wide × WIC–8.5
18	50B018F1	Gear motor, HYPONIC, RH
-	50B018F2	Gear motor, HYPONIC, LH
19	13B644	Bracket, electrical connector
20	41A708	Nut, clip, ¼”–20
21	11A054	Pad, stop
22	41A195	Washer, flat, ¼” standard, SS
23	13D193	Bracket, cam
24	13C365	Bracket, limit switch

Item	Part #	Descritption
25	13A395	Spacer, nylon guide
26	11A086	Grommet, rubber, .875” ID × 1.62” OD
27	11A087	Grommet, rubber, 2.12” ID × 2.87” OD
28	22A098	Duct, wire, (WIC–21.0”) long
29	41A717	Screw, #8–32 × .38”, PHL PHSTS, SS
30	23D030	Harness, header, single slide
31	41A616	Bolt, 3/8” × 1.25”, carriage, SS
32	41A710	Nut, 3/8”–16, large flange, whizlock, SS
33	41A715	Screw, #10–24 × .625”, BU/HD, SS
34	23A240	Switch, limit
35	41A520	Screw, #8–32 × 1.25”, PHL PHSTS, SS
36	22A087	Strain relief, nylon
37	10A024	Tape, sponge rubber, 8.5” long
38	10A024	Tape, sponge rubber, 8” long
39	10A024	Tape, sponge rubber, 9” long
40	50A101	Pulley, timing, 28T, .500” P
41	50A080	Bushing, taperlock, 1.125” bore
42	24B078	Assembly, timing pulley, idle side
43	41A122	Bolt, 5/8” × 1.750” shoulder, ZN
44	28B133	Weldment, idler plate
45	41A611	Screw, 5/16”–18 × .625”, HHCS, SS
46	41A608	Washer, flat, 5/16”, standard, SS
47	50A257	Belt, timing, (4) WIC + 35
48	22A212	Carrier, flexible cable, WIC – 4”
49	22A213	Bracket, mounting, flexible cable carrier
50	22A214	Bracket, mounting, flexible cable carrier
51	41A713	Screw, #4–40 × .38” long, PHL FHMS, SS
52	13A421	Washer, E–chain
53	22A203	Connector, electrical
54	22A107	Cable tie

Upper Truck Assembly

31D109F1, RH
31D109F2, LH

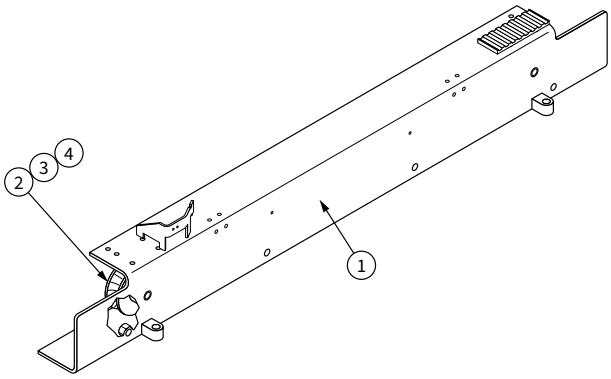

Item	Part #	Descritption
1	28D162F3	Weldment, upper truck, power, SS, RH
-	28D162F4	Weldment, upper truck, power, SS, LH
2	24B076–4	Assembly, wheel, upper roller truck
3	41A613	Bolt, 5/8” × 3/4” L, shoulder
4	10A010	Loctite

Face Frame Assembly

76D403, Trail Edge, No Bolt Lock
76D0405, Trail Edge, With Bolt Lock
76D0407, Lead Edge

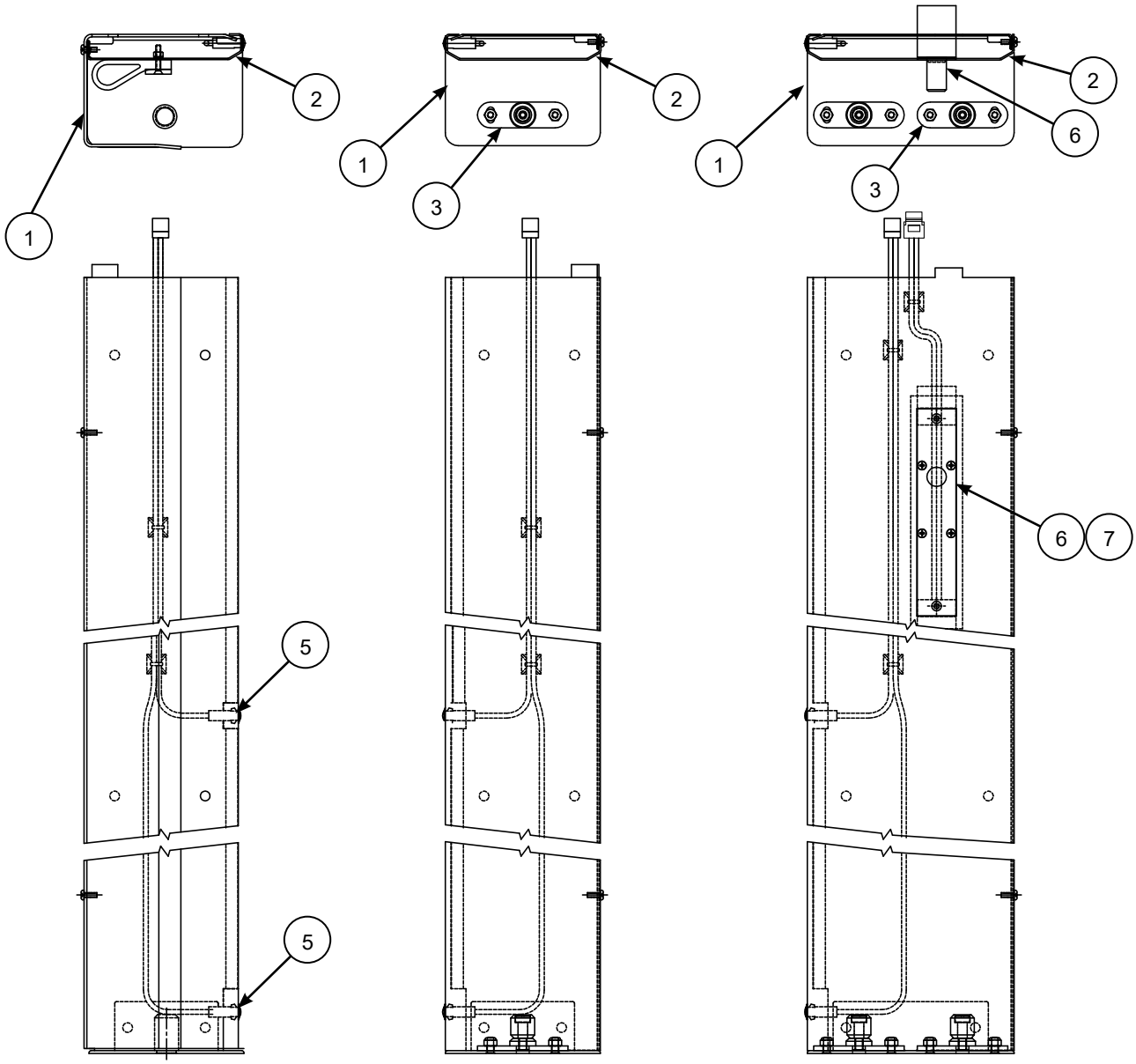

76D407
LEAD EDGE

76D403
TRAIL EDGE
NO BOLT LOCK

76D0405
TRAIL EDGE
W/ BOLT LOCK

Face Frame Assembly Continued

			DESCRIPTION	PART #	ITEM #
-	-	x	ASM, FACE FRAME, SINGLE SLIDE, TRAIL EDGE, NO BOLT LOCK	76D403	-
-	x	-	ASM, FACE FRAME, SINGLE SLIDE, TRAIL EDGE, W/ BOLT LOCK	76D0405	-
x	-	-	ASM, FACE FRAME, SINGLE SLIDE, LEAD EDGE, NO BOLT LOCK	76D0407	-
-	-	1	WLDMNT, SIDE-FRAME, FLR RLR, TRAIL, SINGLE SLIDE	28C232	1
-	1	-	WLDMNT, SIDE-FRAME, FLR RLR, TRAIL, BOLT LOCK, SINGLE SLIDE	28B0286	1
1	-	-	WLDMNT, SIDE-FRAME, FLR RLR, LEAD, SINGLE SLIDE	28C231	1
-	-	1	COVER, SIDE FRAME, SINGLE SLIDE, FIRE DOOR	13D247	2
-	1	-	WLDMNT, FACE FRAME COVER, BOLT LOCK	28B0299	2
1	-	-	COVER, SIDE FRAME, LEAD EDGE, SINGLE SLIDE	13D276	2
-	2	1	ASM, GUIDE ROLLER	24A023	3
AR	AR	AR	HARNESS, SINGLE PHOTO EYE, RECEIVER	23C023	4
AR	AR	AR	HARNESS, SINGLE PHOTO EYE, TRANSMITTER	23C024	5
AR	AR	AR	ASM, BOLT LOCK, 3/4” DIA	23A0376NN	6
AR	AR	AR	COVER, BOLT LOCK	13B2191NN20	7
AR	AR	AR	CABLE 18/3 SVT, 36”	22A208	8
AR	AR	AR	CONNECTOR, ELEC, 4-POS, .156 MTA, FEMALE	22A203	9

When ordering parts, specify Job Number, Door Number and Manufacture Date

Control Panel Assembly

18D340, 115V

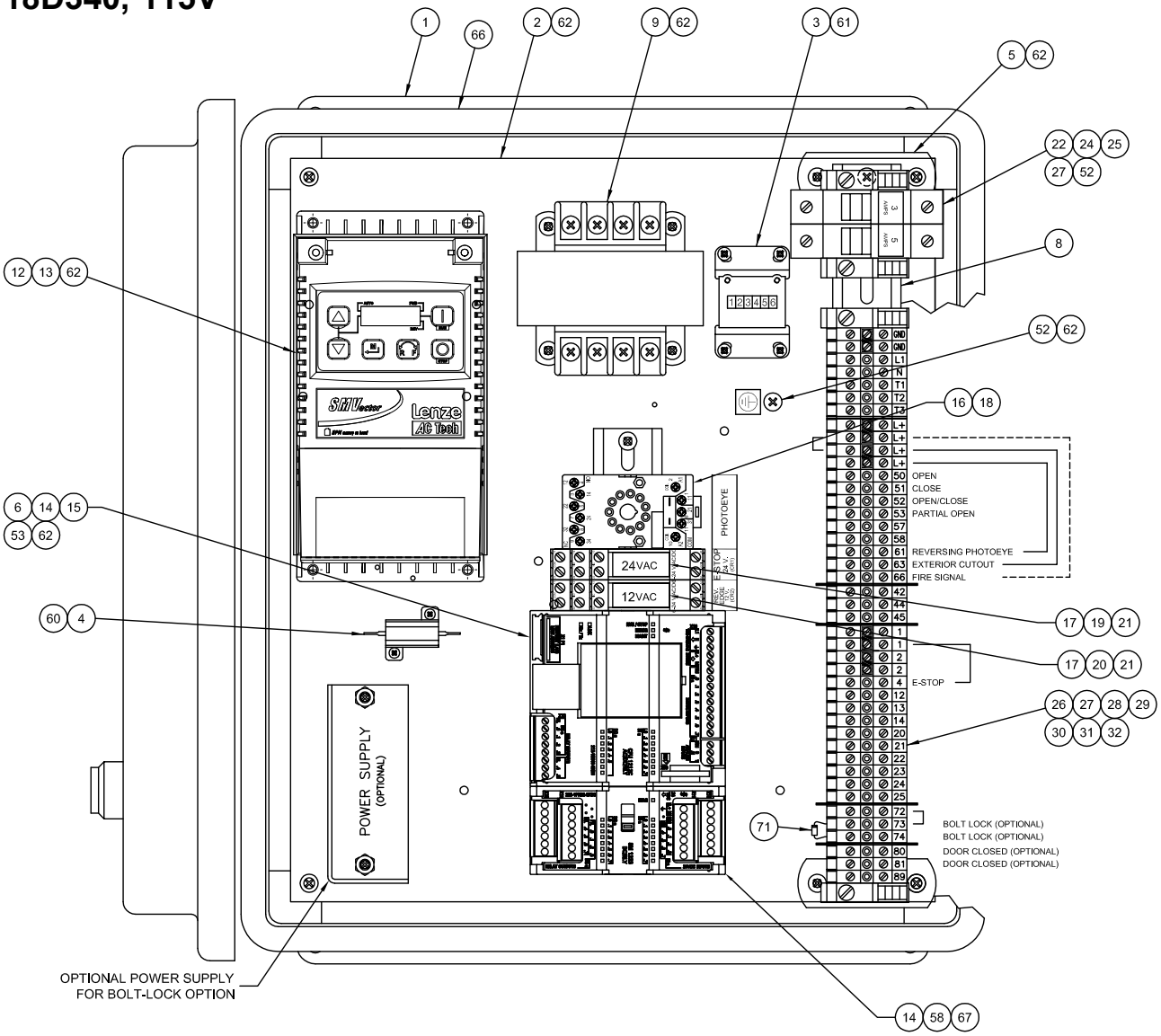

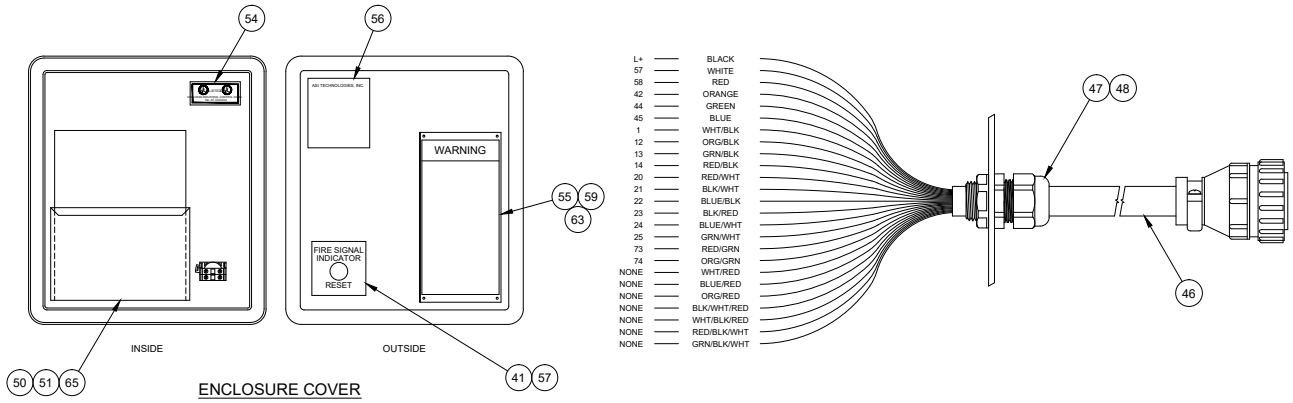

When ordering parts, specify Job Number, Door Number and Manufacture Date

REPLACEMENT PARTS

Control Panel Assembly Continued

Item	Part #	Descritption
1	14D011	Enclosure, 16” × 14”
2	13C366	Subpanel
3	23A003	Counter, 24 VAC
4	23A190–200	Resistor, 200 Ohms
5	13B679	Bracket, DIN Rail
6	22B025	Rail, DIN, 100 mm
7	33B026	Rail, DIN, 175 mm
8	22A006	Rail, DIN, 375 mm
9	23B040	Transformer, 120/240V to 24V
12	23B0175	VFD, 120 VAC
13	18B022	Parameter settings, VFD
14	23A0490	Programmable logic controller
15	18B010-2	Program, Seimens PLC
16	23A233	Base, 11 pin
17	23A232	Base, relay, Finder
18	23A226	Amplifier, Photoeye, Dual Channel
19	23A234	Relay, 24 VAC, Finder
20	23A235	Relay, 12 VAC, Finder
21	23A241	Suppressor, RC, Finder
22	23A239	Block, fuse, 2 pole
24	22A210–2	Fuse, midget, 3 amp
25	22A210–3	Fuse, midget, 5 amp
26	22A007	Block, terminal
27	22A008	Retainer, end
28	22A012	Label, terminal block
29	22A009	Barrier, terminal block

Item	Part #	Descritption
30	11B039	Insulator, Terminal Block
31	22A019	Separator, link rail
32	22A010	Link rail, 2 position
41	22A060	Pushbutton, Illuminated, Yellow
44	-	Power Supply (Optional Bolt Lock)
45	23C025	Harness, control panel, pharm w/PLC
46	23C022F1	Harness, 19 conductor, 16’ Long
46	23C022F3	Harness, 19 conductor
47	22A217	Strain relief, nylon
48	22A196	Locknut, Nylon
50	17A036	Envelope
51	18D204	Drawing, Pharm Fire door, w/PLC
52	17B020	Label, subpanel
53	17B021	Label, PLC
54	17A107	Label, UL 508
55	17C012	Label, Warning
56	17B007	Label, Rating Plate
57	17B023	Label, Fire Signal/Reset
59	13B684	Plate, Mounting, Warning Label
60	41A052	Screw, #4–40 × .250”, PAN, PHL
61	41A720	Screw, #6–32 × .375”, PAN, PHL, type “F”
62	41A721	Screw, #10–32 × .375”, PAN, PHL, type “F”
63	41A008	Rivet, Pop, .125 Dia
64	22A241	Plug, Hole, 1/2” Conduit
65	17B033	Label, PLC Status
66	17A231	Label, Drilling Enclosure

Fire/Heat Sensor Options

Item	Part #	Descritption
1	23A0452	SMOKE DETECTOR, PHOTOELECTRIC, W/ ALARM & STROBE, 517TCSB-W
2	23A0466	HEAT DETECTOR, SURFACE MOUNT, 12-A27020-001-140

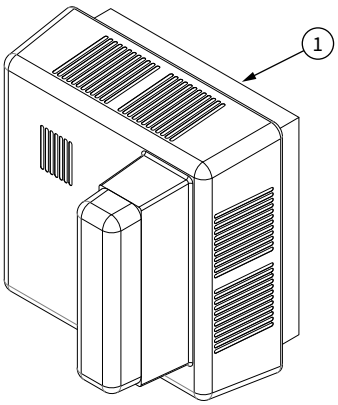

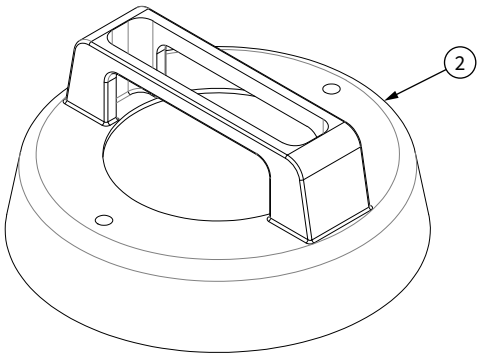

Gasket Retainer/Hold-In Brackets

24D111F1, RH
24D111F2, LHhotoeye

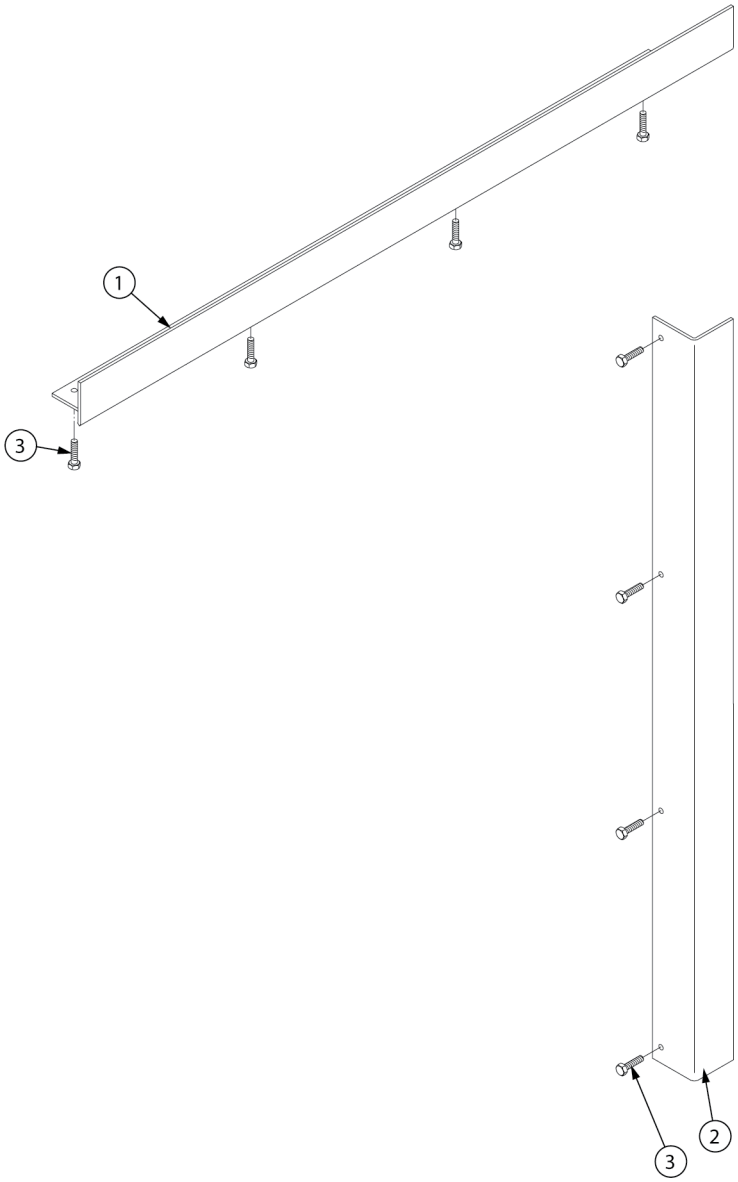

Item	Part #	Descritption
1	13C386F1	Hold-in bracket, top, S/S
-	13C386F2	Hold-in bracket, top, galvanized
2	13C387F1	Hold-in bracket, trailing edge, S/S
-	13C387F2	Hold-in bracket, trailing edge, galvanized
3	N/A	Screw, 3/8” (Supplied by Installer)

When ordering parts, specify Job Number, Door Number and Manufacture Date

OPEN UP TO WHAT'S POSSIBLE

CLEANSEAL AN ASI DOORS BRAND

ENVIRO AN ASI DOORS BRAND

MARATHON AN ASI DOORS BRAND

asidoors.com

ASI DOORS, INC. 5848 North 95th Court, Milwaukee, WI 53225 (800) 558-7068