ALL SHOPS

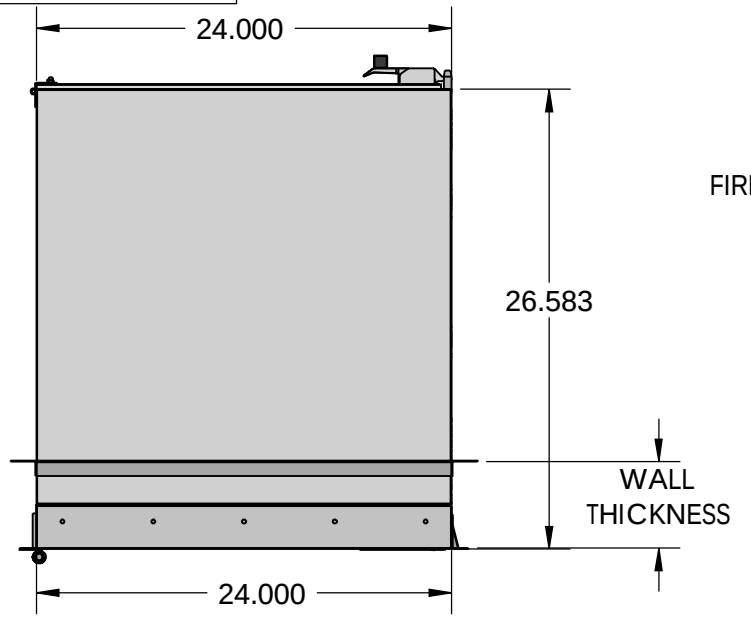

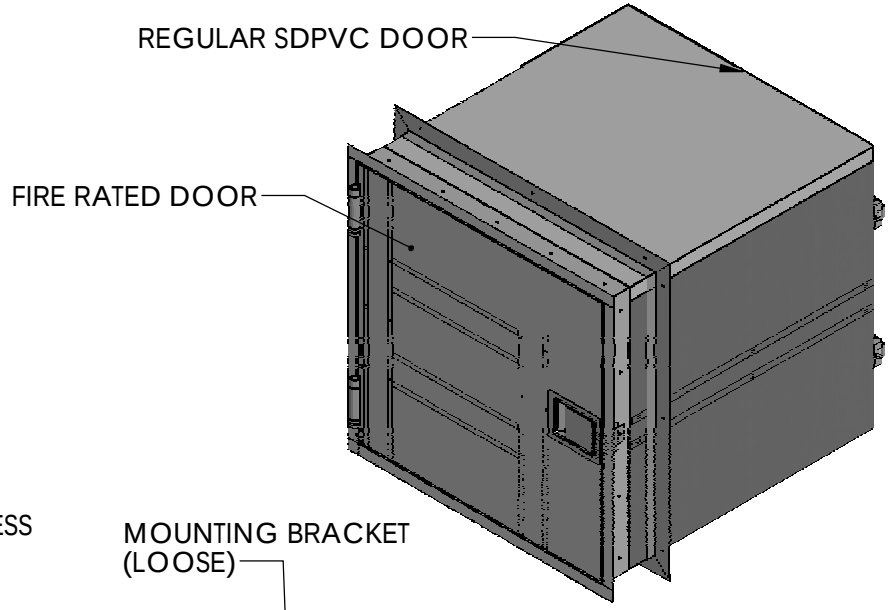

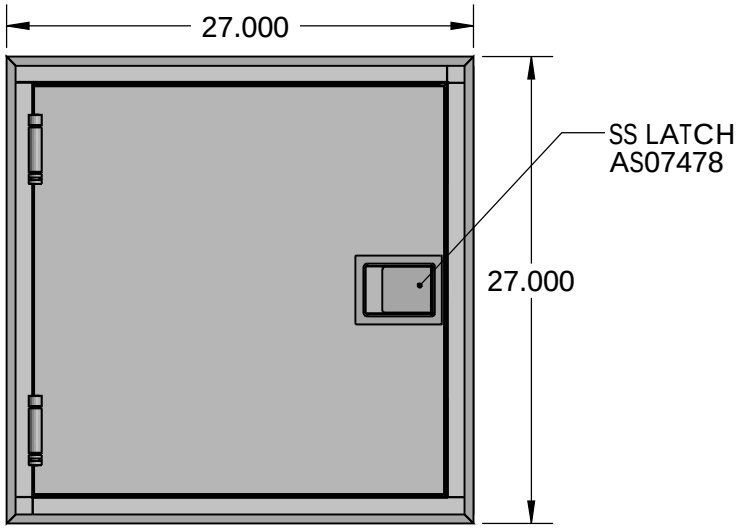

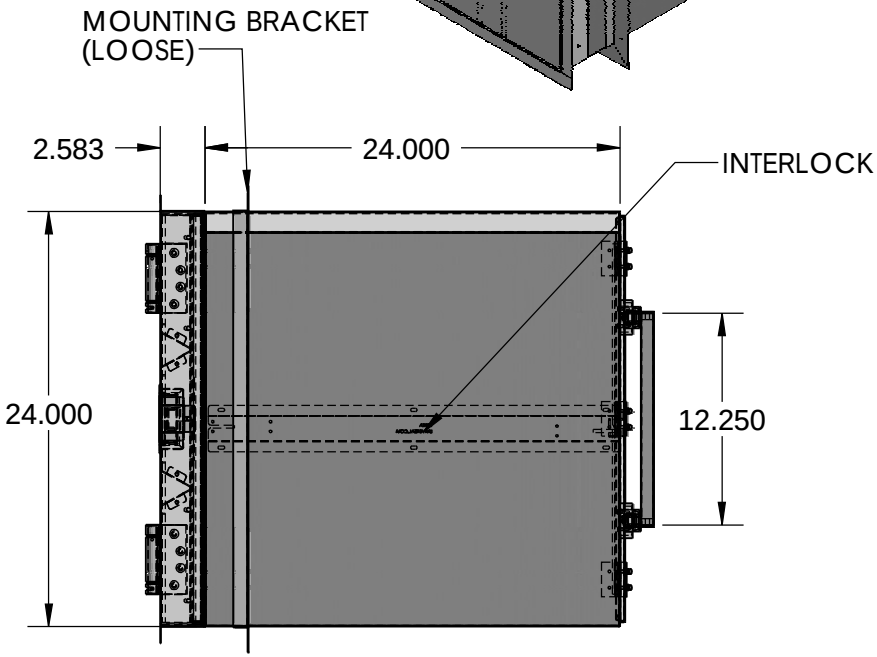

REVISIONS			
RV#	DESCRIPTION	DATE	BY
NC	INITIAL RELEASE	2/18/15	AV
1	LIFT LATCH PHOTO	8-26-16	L.F.

MATERIAL SPEC.: STAINLESS STEEL SDPVC

FINISH SPEC.:

UNLESS OTHERWISE SPECIFIED, DIMENSIONS ARE IN INCHES

TOLERANCES ON:

.XX DECIMALS ± .03 X° ± 1°

.XXX DECIMALS ± .010 X/X ± 1/64

SIGNATURES		DATE
ISSUED BY:	LUPE F.	8-26-16
REF #:	P122526	

Terra Universal

Proprietary & Confidential
All rights reserved by
TERRA UNIVERSAL
Disclosure or Copying Prohibited

TITLE: FIRE-RATED DOOR PASS-THROUGH;304SS, REGULAR, WALL MOUNT 24"W x 26.5"D x 24"H

A 1993-73A

SCALE

SHEET 1 OF 12