- Fully stainless steel frame and base built to handle wash-down and corrosive environments with ease
- Easy-to-clean surfaces meet strict sanitation standards for food processing, pharmaceutical applications, and clean-room facilities, with cGMP-compliant models available
- Built with slip-resistant flooring to enhance worker safety
- Space-saving design navigates easily around equipment in confined areas
- Designed to give workers easy, comfortable access to over-head work flooring



Features

- Operates in factory air
- Fast operating time
- Single and two person models
- Slip not flooring
- 100% stainless steel
- Various layout and heights available
- Air powered available
- Spark proof available



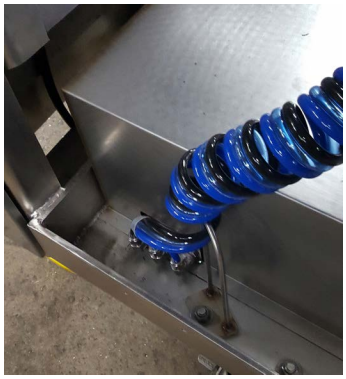





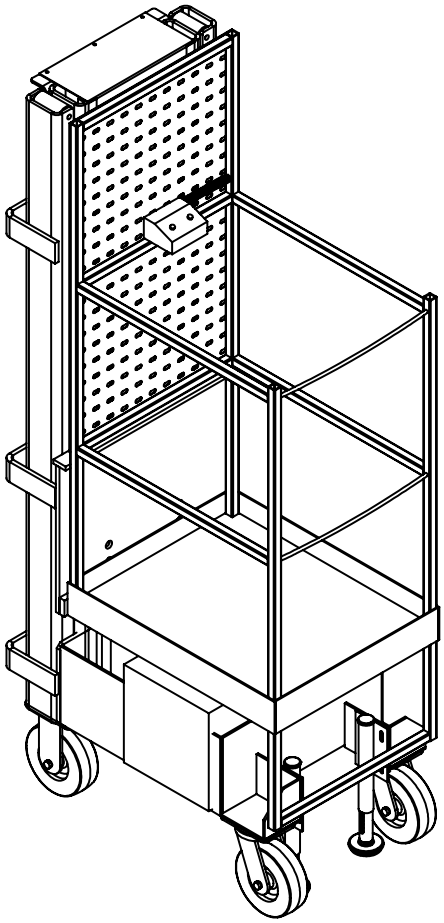

Terra Universal, Inc. • TerraUniversal.com • 800 S. Raymond Ave. Fullerton, CA 92831 USA • TEL: +1-714-578-6000 FAX: +1-714-578-6020

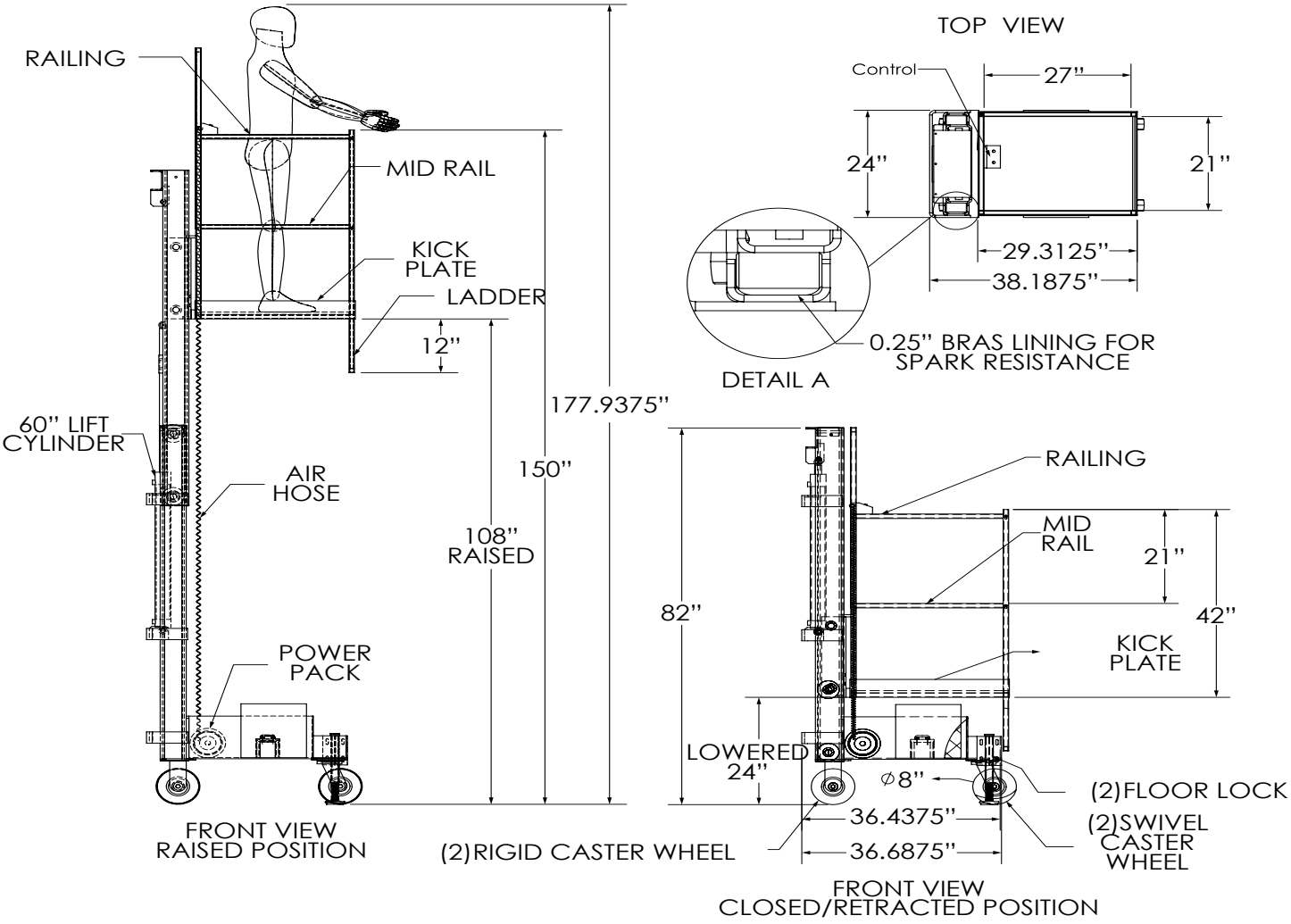

Terra Universal, Inc. • TerraUniversal.com • 800 S. Raymond Ave. Fullerton, CA 92831 USA • TEL: +1-714-578-6000 FAX: +1-714-578-6020