- Fully constructed in 304L or 316L stainless steel, this tipper and dumper resists corrosion
- Enables clean, controlled tipping, dumping, and transport of materials across the worksite
- Minimizes manual labor and strain through hydraulic or electric-powered dumping
- Designed to meet GMP, FDA, and food safety regulations
- Suited for a wide range of materials, including powders, liquids, and solids

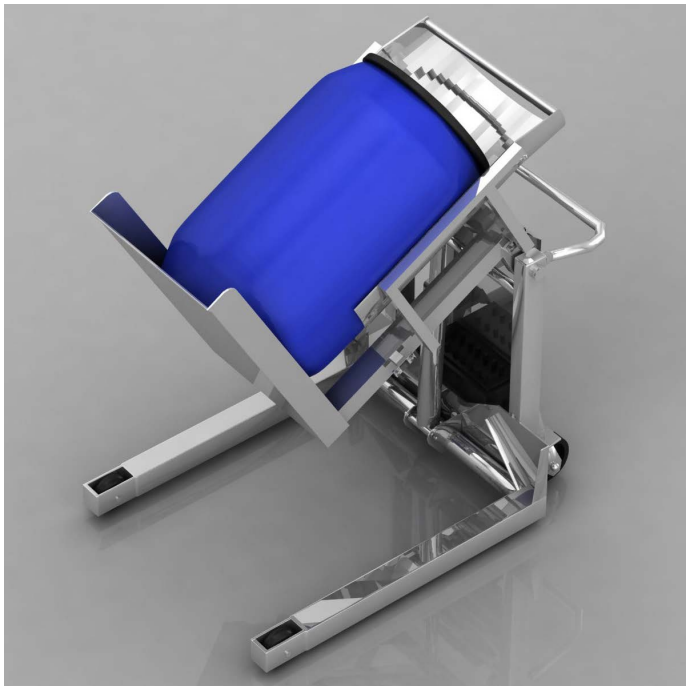

Features

- 38”, 48” and 60” tipping height
- Up to 115 degree tipping angle
- 1,000 lbs capacity
- 304 or 316 Stainless Steel
- Gel battery and on board charger

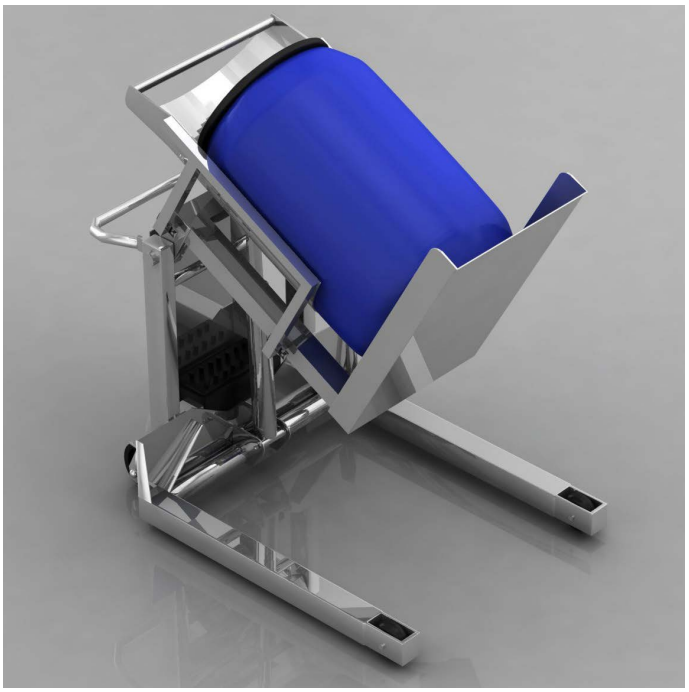

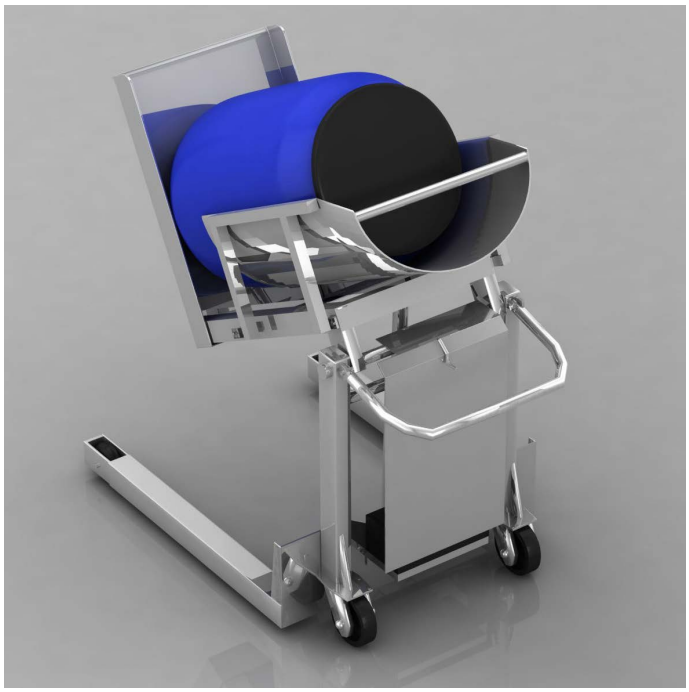

Terra Universal, Inc. • TerraUniversal.com • 800 S. Raymond Ave. Fullerton, CA 92831 USA • TEL: +1-714-578-6000 FAX: +1-714-578-6020

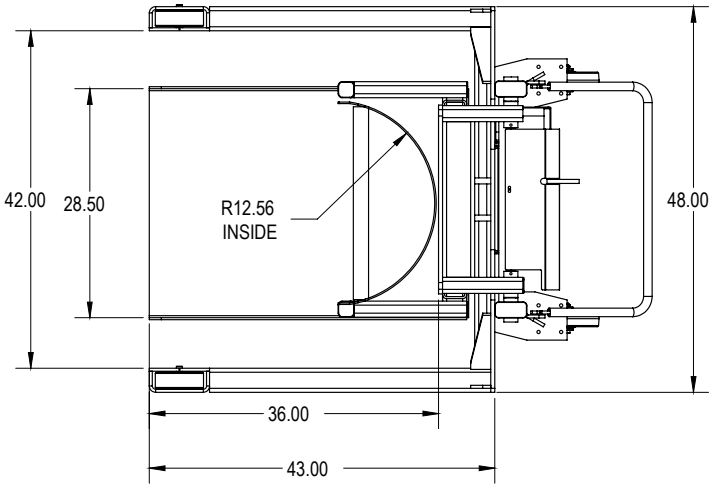

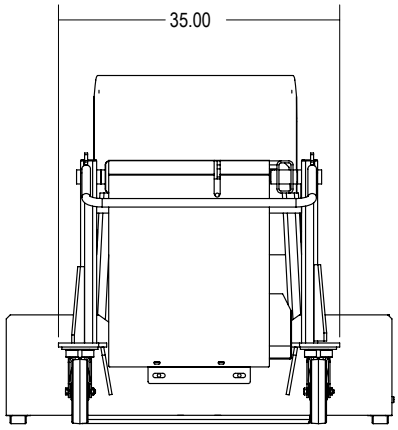

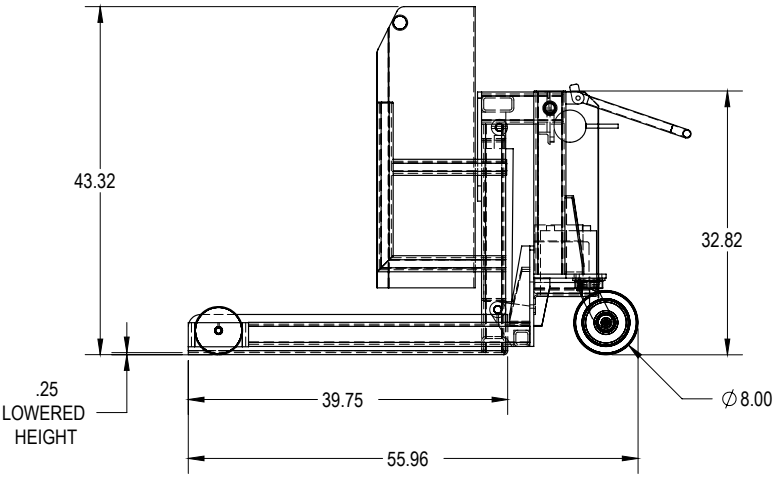

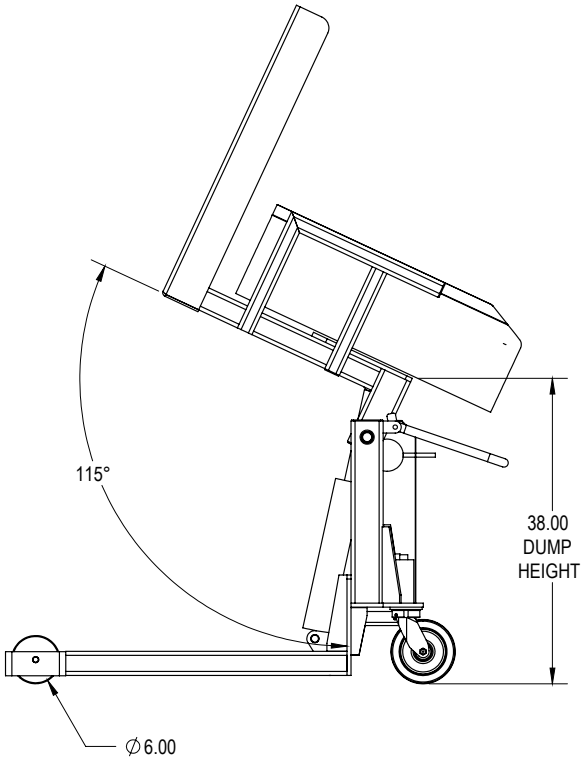

Terra Universal, Inc. • TerraUniversal.com • 800 S. Raymond Ave. Fullerton, CA 92831 USA • TEL: +1-714-578-6000 FAX: +1-714-578-6020