ALL SHOPS

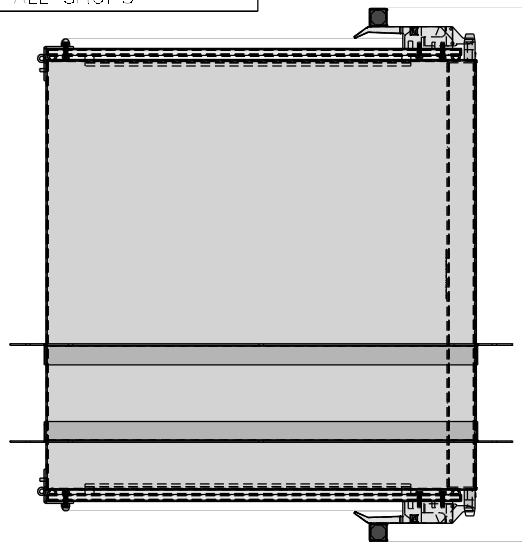

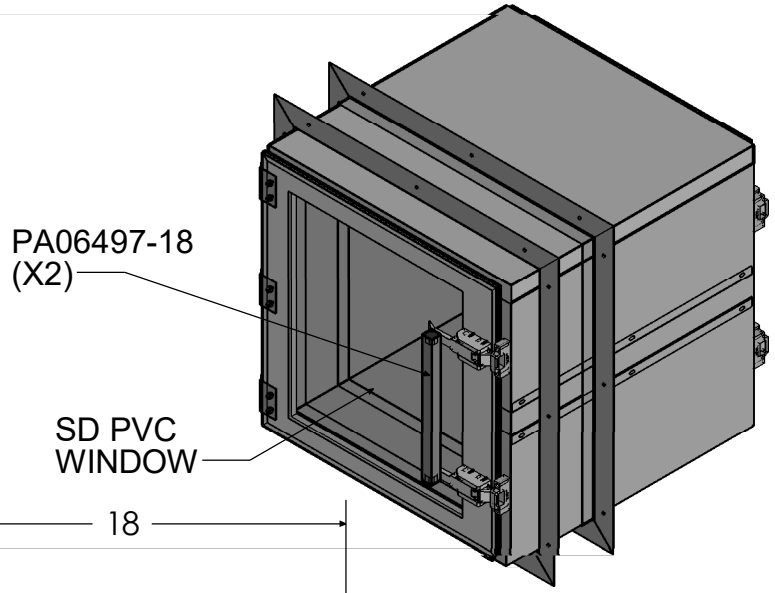

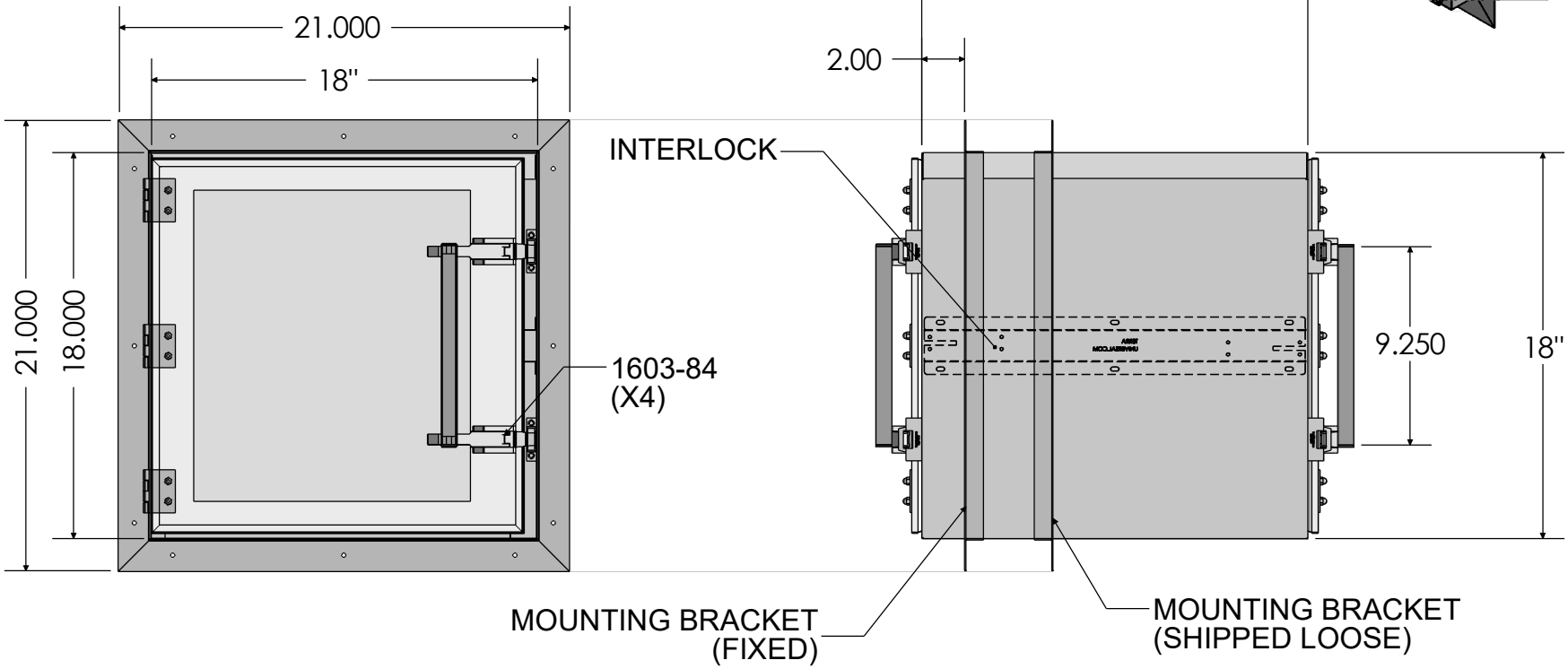

REVISIONS			
RV#	DESCRIPTION	DATE	BY
NC	INITIAL RELEASE	3-20-17	JP

MATERIAL SPEC.: 304SS

FINISH SPEC.:

UNLESS OTHERWISE SPECIFIED, DIMENSIONS ARE IN INCHES

TOLERANCES ON:

.XX DECIMALS ±.03 X° ± 1°

.XXX DECIMALS ±.010 X/X ±1/64

SIGNATURES	DATE
ISSUED BY: JUAN R	3-20-17
REF #:	

Terra Universal

PROPRIETARY & CONFIDENTIAL
ALL RIGHTS RESERVED BY
TERRA UNIVERSAL
DISCLOSURE OR COPYING PROHIBITED

TITLE: **PASS-THROUGH; 304SS WALL MOUNT 18"W x 18"D x 18"H**

A | **1991-73D**

SCALE | SHEET 1 OF 9