VLJQîRII

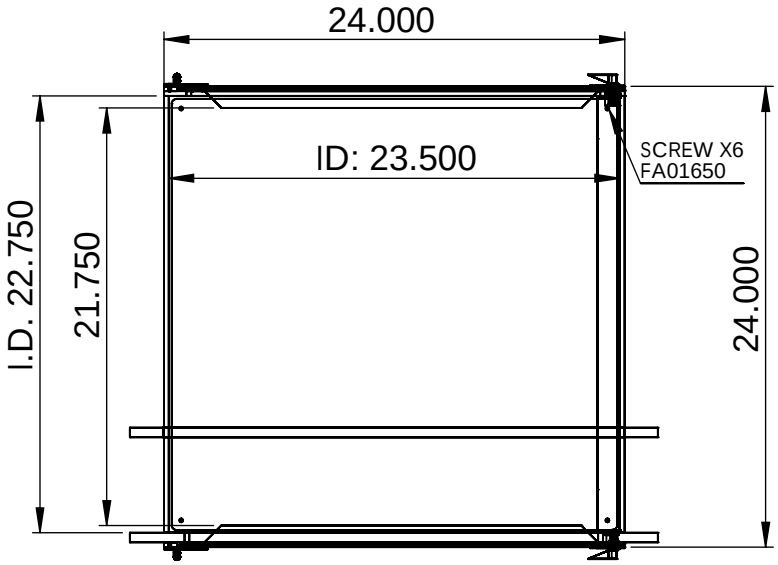

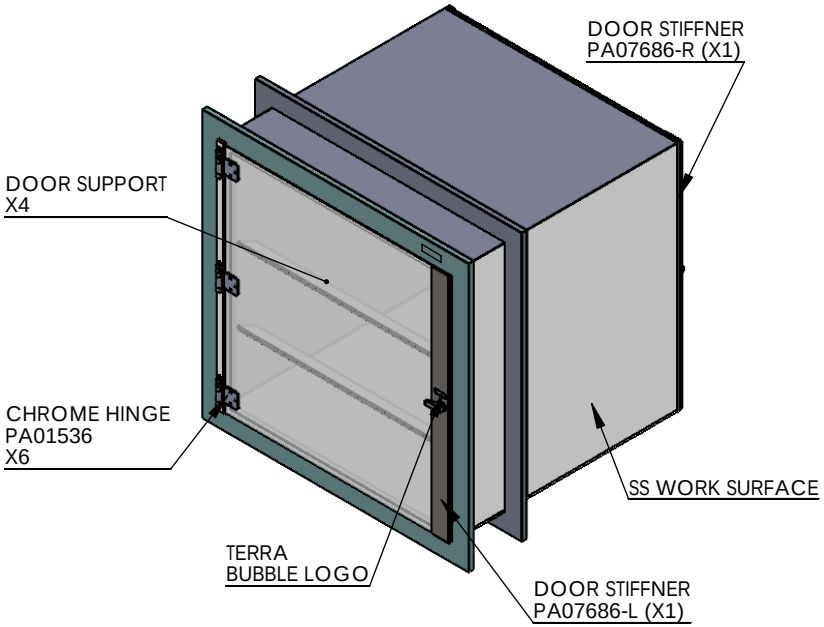

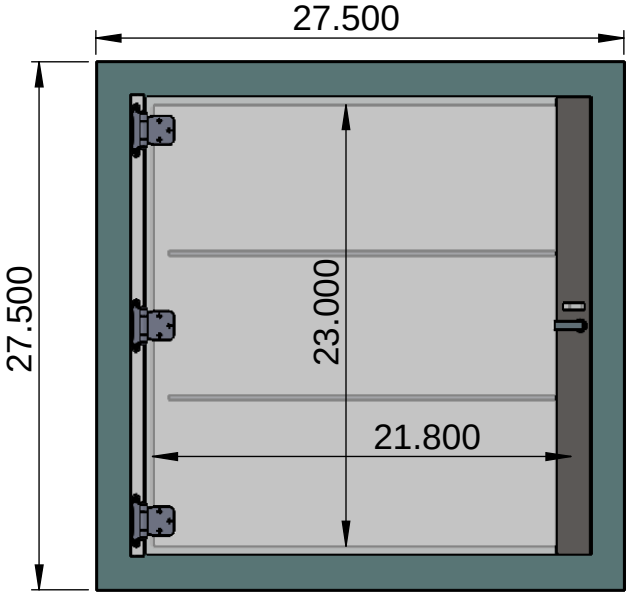

WALL CUT OUT
24.500 W X 24.500H

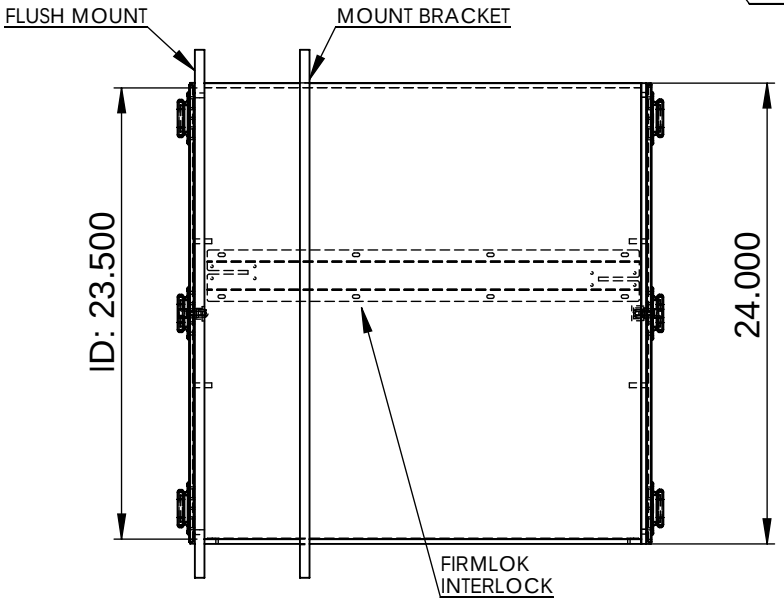

UHYLVLRQV			
UY'	GHVFULSWLRQ	GDWH	E\
QF	LQLWLDOîUHOHDVH	4 48 4;	MU

PDWHULDOîVSHF1

SRO\SURS\OHQH
FOHDUîDFU\OLFîGRRUV

ILQLVKîVSHF1

XQOHVVîRWKHUZLVHîVSHFLILHGOîGLPHQVLRQVîDUHîLQîLQFKHV

WROHUDQFHVîRQ=

1[[GHFLPDOVî¬ 136 [«¬ 4«

1[[[GHFLPDOVî¬ 1343 [2[î¬ 4297

VLJQDWXUHV		GDWH
LVVXHGîE\=	MXDQîU	4 48 4;
UHIî'=	.	î

Sdqq`
Tmhudqr`k

Oqnoqlds`qx & Bnmelcdmsl`k î
@kk qlfgsr qdrdqudc ax
SDQQ@ TMHUDQR@K î
Cirbknr tqd nq Bnoxlmf Oqnglalsdc

WLWOH

VALULINE PASS-THROUGH
POLYPROPYLENE
24W X 24D X 24H

5967 3:D

VFDOH | î | î | VKHHW 4 RI 4