DWG NO: 1992-42-27892

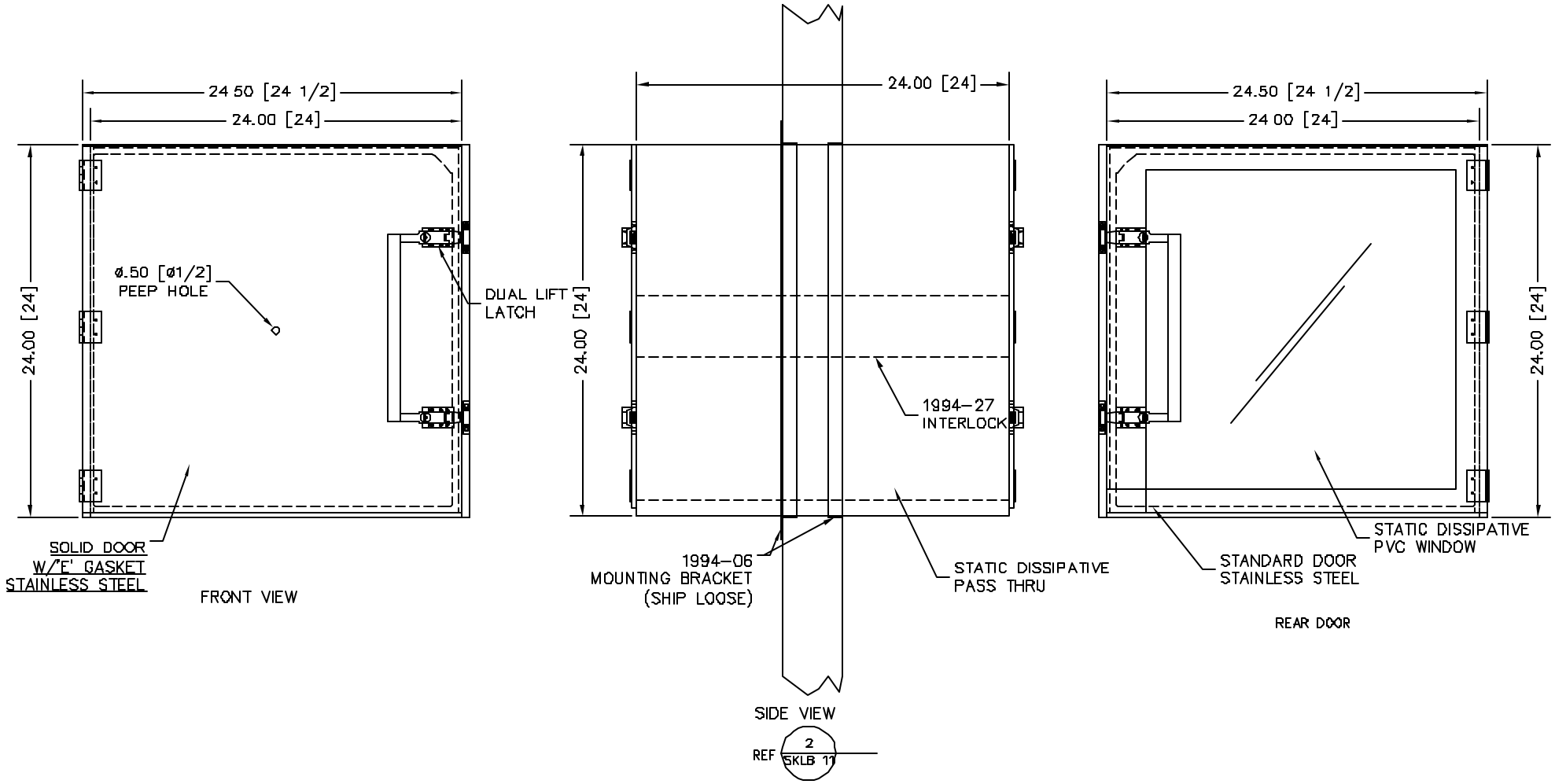

ENGINEERING APPROVAL

ENGINEERING APPROVAL

CUSTOMER APPROVAL

LTR	DESCRIPTION	DATE	APPD
NC	INITIAL RELEASE	10/28/02	

CONFIG	DESCRIPTION
MATERIAL SPEC.	FINISH SPEC.
STATIC DISSIPAIVE PVC STAINLESS STEEL SHEET	

UNLESS OTHERWISE SPECIFIED, DIMENSIONS ARE IN INCHES
TOLERANCES ON:
.XX DECIMALS ± 03 X° ± 1°
.XXX DECIMALS ± 010 X/X ± 1/64

SIGNATURES		DATE
DRAWN:	GONZALEZ	10.28/02
ENGR		

Terra Universal

PROPRIETARY & CONFIDENTIAL
ALL RIGHTS RESERVED BY
TERRA UNIVERSAL
DISCLOSURE OR COPYING PROHIBITED

TITLE PASS THROUGH, SDPVC
24W X 24D X 24H
W/ FRONT SS DOOR

NEXT ASSY	USED ON	SCALE	SHEET
	105163	NONE	1 OF 1

A 1992-42-27892