DWG NO: 1992-48-14256

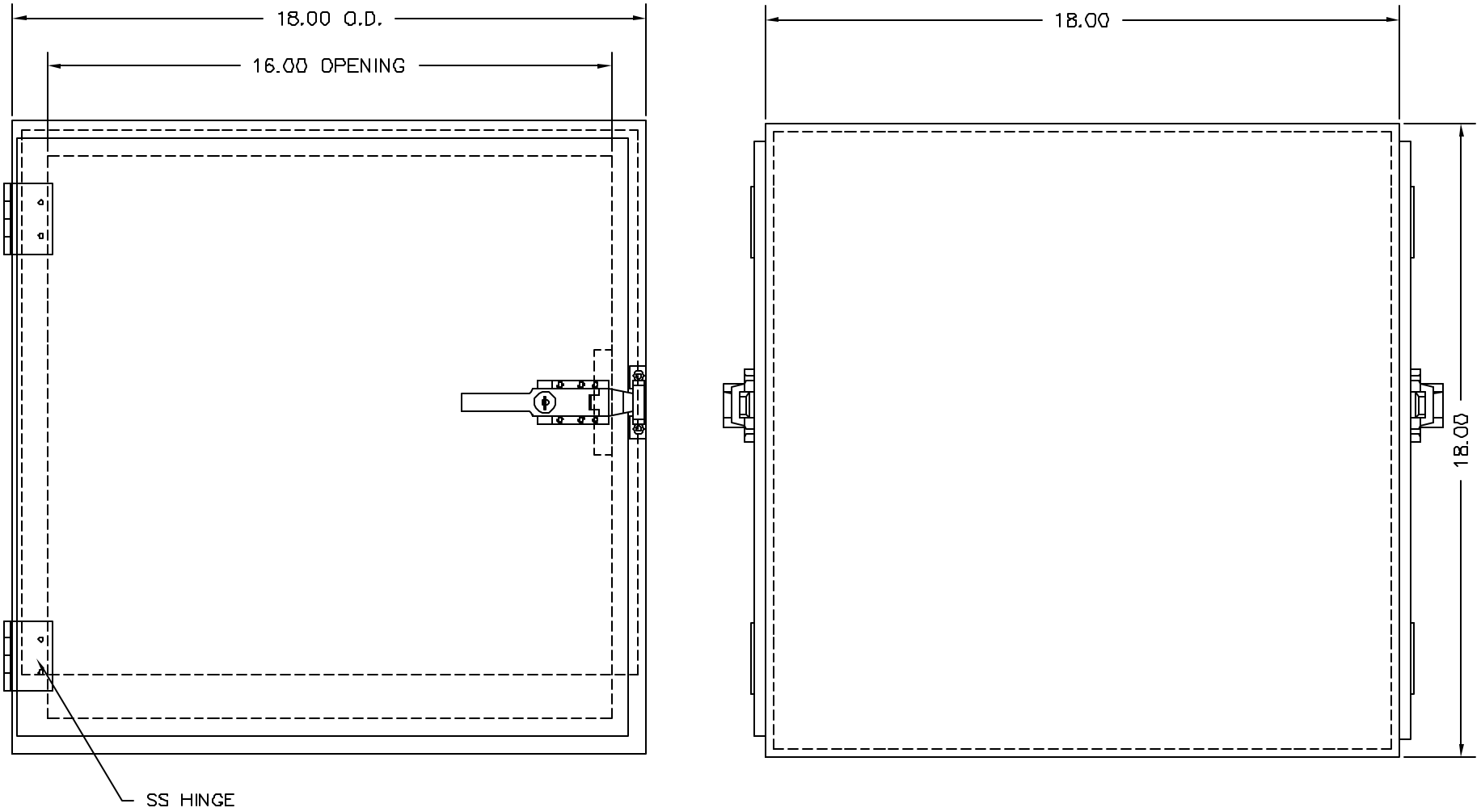

ENGINEERING APPROVAL

ENGINEERING APPROVAL

CUSTOMER APPROVAL

LTR	DESCRIPTION	DATE	APPD
NC	INITIAL RELEASE		EDT
A	Duplicate from 69977	10/5/00	JLA

-1	
CONFIG	DESCRIPTION
MATERIAL SPEC.	FINISH SPEC.
1/4" ACRYLIC	
CLEAR	

UNLESS OTHERWISE SPECIFIED, DIMENSIONS ARE IN INCHES
TOLERANCES ON:
.XX DECIMALS ± .03 X° ± 1°
.XXX DECIMALS ± .010 X/X ± 1/64

SIGNATURES		DATE
DRAWN:	MARIANO	7/14/00
ENGR:	MARIANO	

Terra Universal

TITLE
PASS THROUGH,
18W"x18D"x18"H
ACRYLIC

NEXT ASSY	USED ON	SCALE	NONE	PASS THROUGH	SHEET 1 OF 1
	72034	A	1992-48-14256		
	69977				