DWG NO: 1992-48A-55985

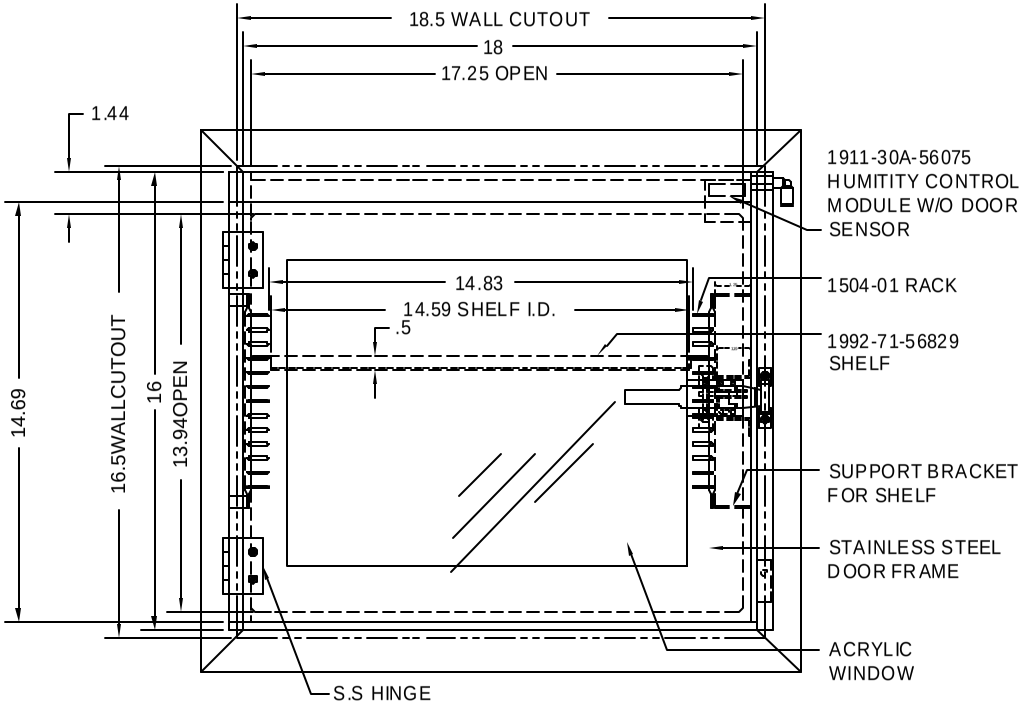

FRONT VIEW
(CLEAN SIDE)

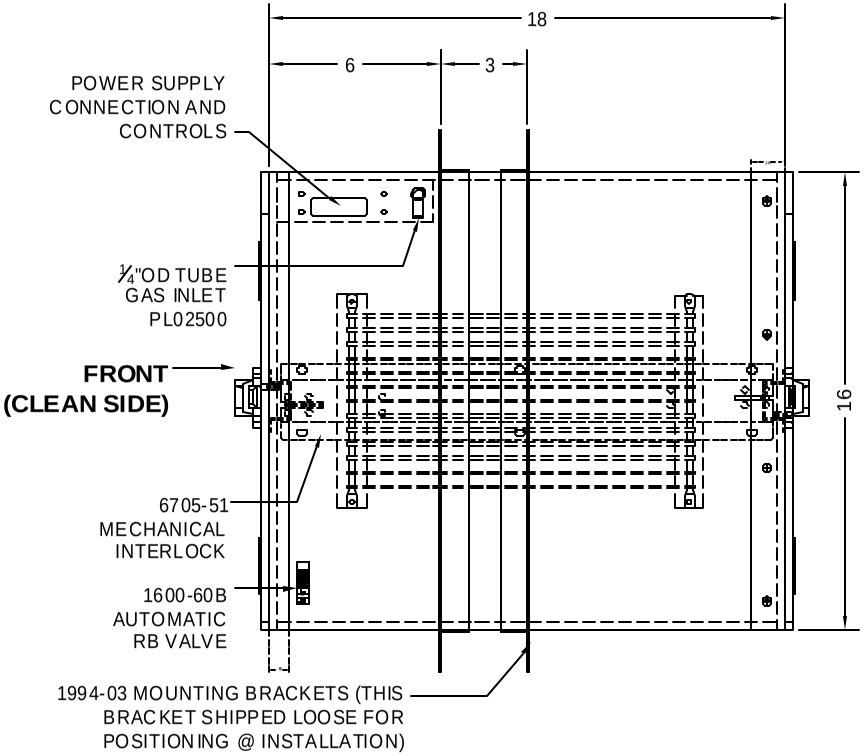

RIGHT SIDE VIEW

LTR	DESCRIPTION	DATE	APPD
NC	INITIAL RELEASE	09.08.06	

CONFIG	DESCRIPTION
-1	

MATERIAL SPEC.	FINISH SPEC.
304 SS 1/4" THK ACYRLIC CLEAR	

UNLESS OTHERWISE SPECIFIED, DIMENSIONS ARE IN INCHES

TOLERANCES ON:

.XX	DECIMALS ±	.03	X° ±	1°
.XXX	DECIMALS ±	.010	X/X ±	1/64

SIGNATURES		DATE
DRAWN:	YACKLE	8/31/06
ENGR:		

Terra Universal

TITLE
PASS THROUGH,
18"Wx18"Dx16"H
ACRYLIC

NEXT ASSY	USED ON	SCALE	NONE	PT	SHEET 1 OF 2
	137050	A	1992-48A-55985		