DWG NO: 1992-51-43682

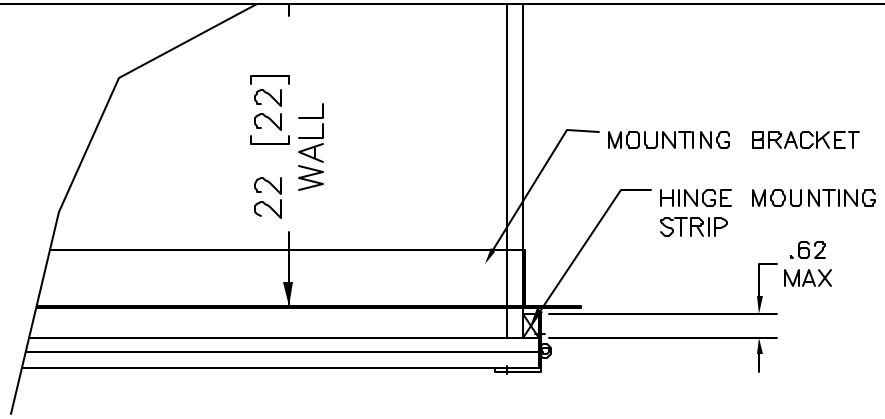

PARTIAL TOP VIEW
DOOR HINGE MOUNTING

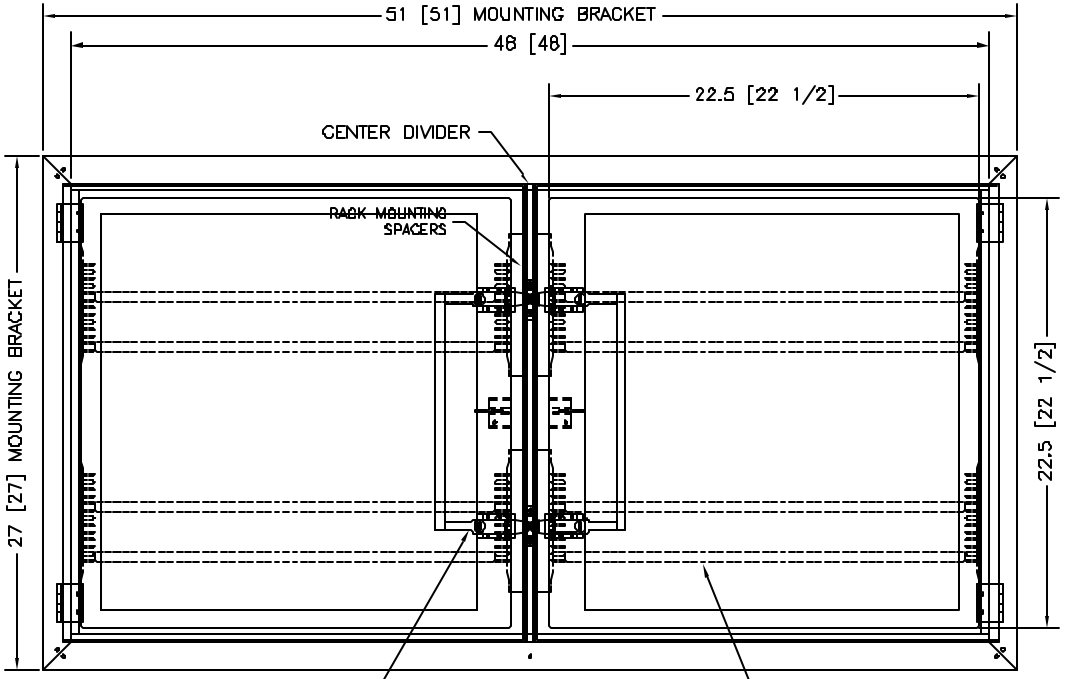

FRONT VIEW

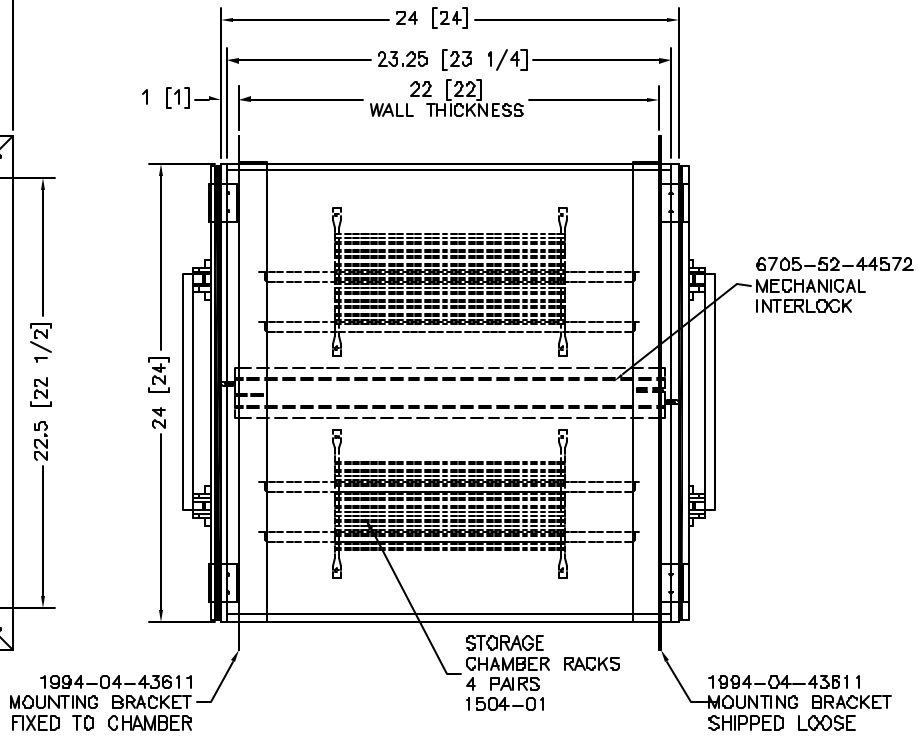

LTR	DESCRIPTION	DATE	APPD
NC	INITIAL RELEASE	2/7/05	
B	ELIMINATED MAG INTRLK	2.14.05	EDT

CONFIG	DESCRIPTION
MATERIAL SPEC.	FINISH SPEC.

UNLESS OTHERWISE SPECIFIED, DIMENSIONS ARE IN INCHES
TOLERANCES ON
.XX DECIMALS ± .06 X° ± 1°
.XXX DECIMALS ± .010 X/X ± 1/16

SIGNATURES		DATE
DRAWN:	VEGA	12.27.04
ENGR:	TUCKER	

Terra Universal

PROPRIETARY & CONFIDENTIAL
ALL RIGHTS RESERVED BY
TERRA UNIVERSAL
DISCLOSURE OR COPYING PROHIBITED

TITLE
CUSTOM PASS-THROUGH
CHAMBER, ACRYLIC
48"W x 24"D x 24"H

NEXT ASSY	USED ON	SCALE	
	122826	NONE	P/T

A 1992-51-43682

SHEET 1 OF 2