DWG NO: 1992-86-19957

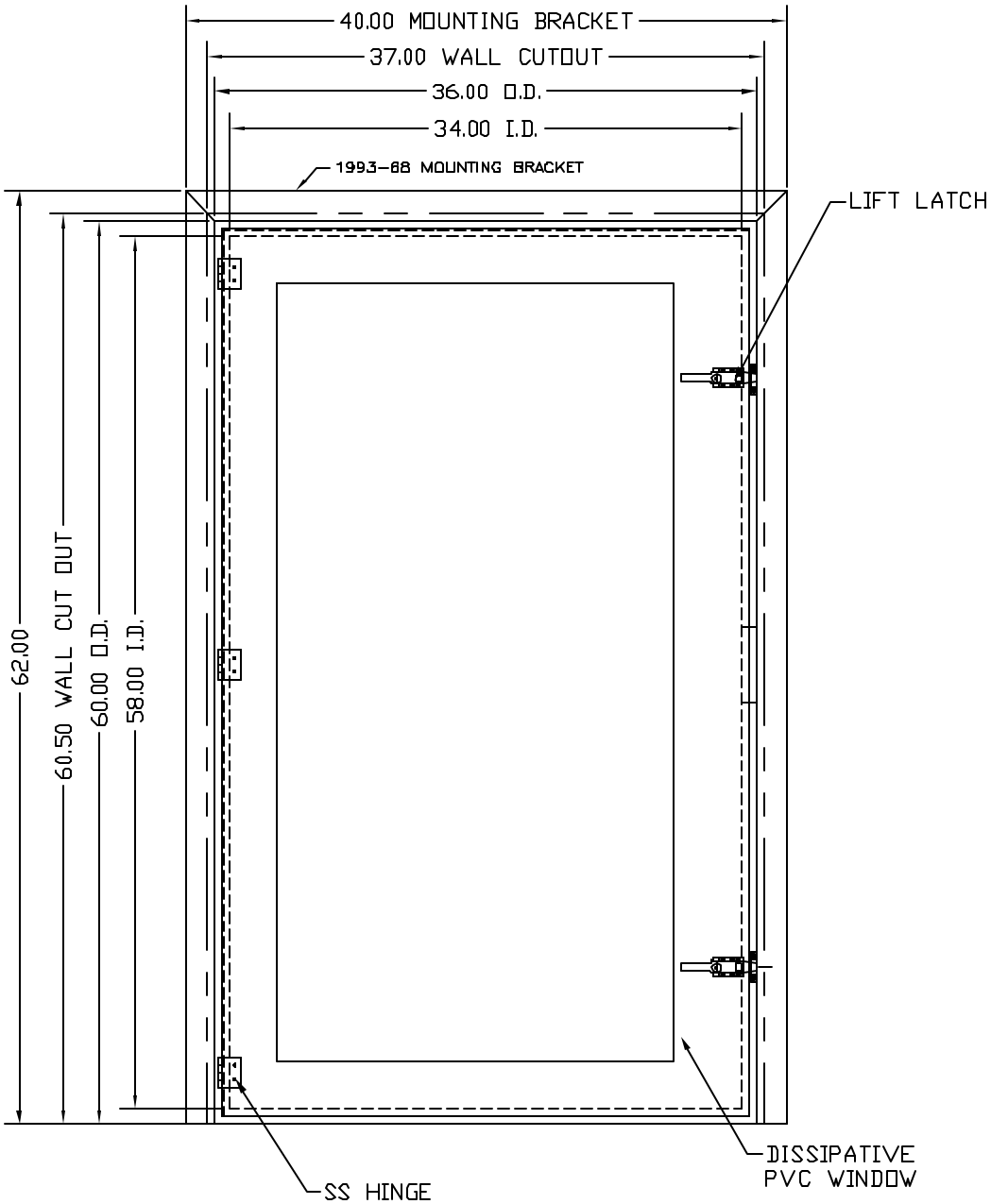

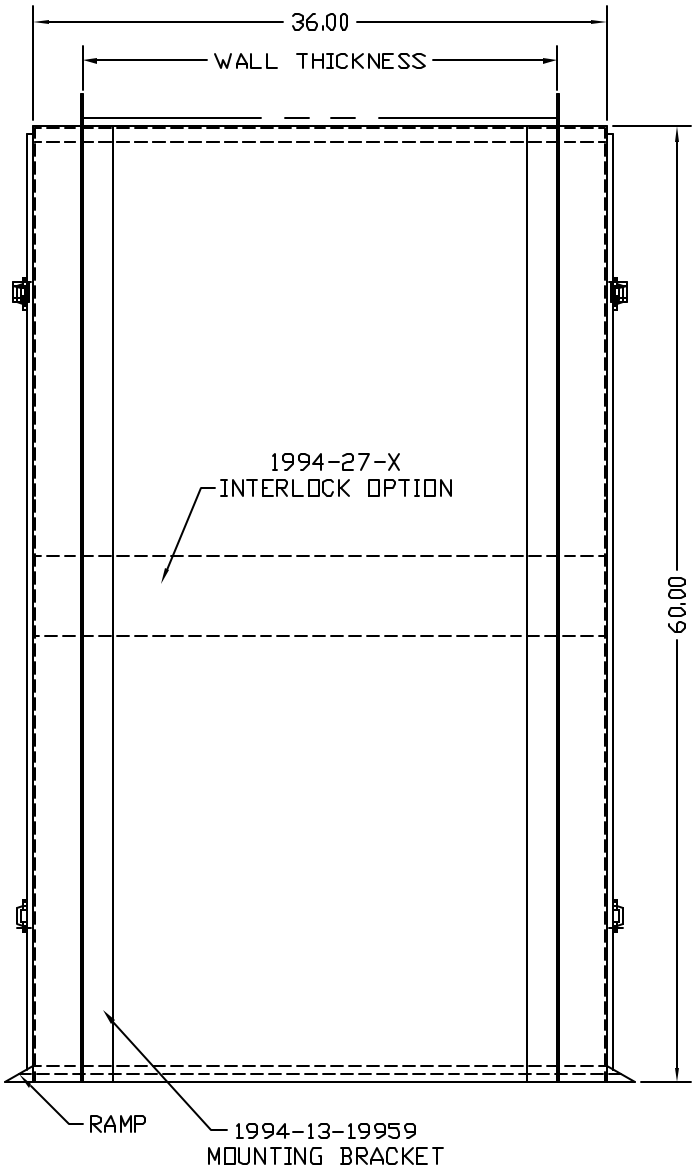

LTR	DESCRIPTION	DATE	APPD
NC	INITIAL RELEASE		

-1	
CONFIG	DESCRIPTION
MATERIAL SPEC.	FINISH SPEC.
PVC SS 16 GA .0806	

UNLESS OTHERWISE SPECIFIED, DIMENSIONS ARE IN INCHES

TOLERANCES ON:

.XX DECIMALS ± .03 X° ± 1°

.XXX DECIMALS ± .010 X/X ± 1/64

SIGNATURES		DATE
DRAWN:	RAJWANT	01-16-01
ENGR:	JOE	01-16-01

Terra Universal

TITLE

PASS THROUGH,
FLOOR MOUNT
36"Wx36"x60"H

		A	1992-86-19957
NEXT ASSY	USED ON	SCALE	SHEET 1 OF 1