DWG NO: 1992-86A-58584

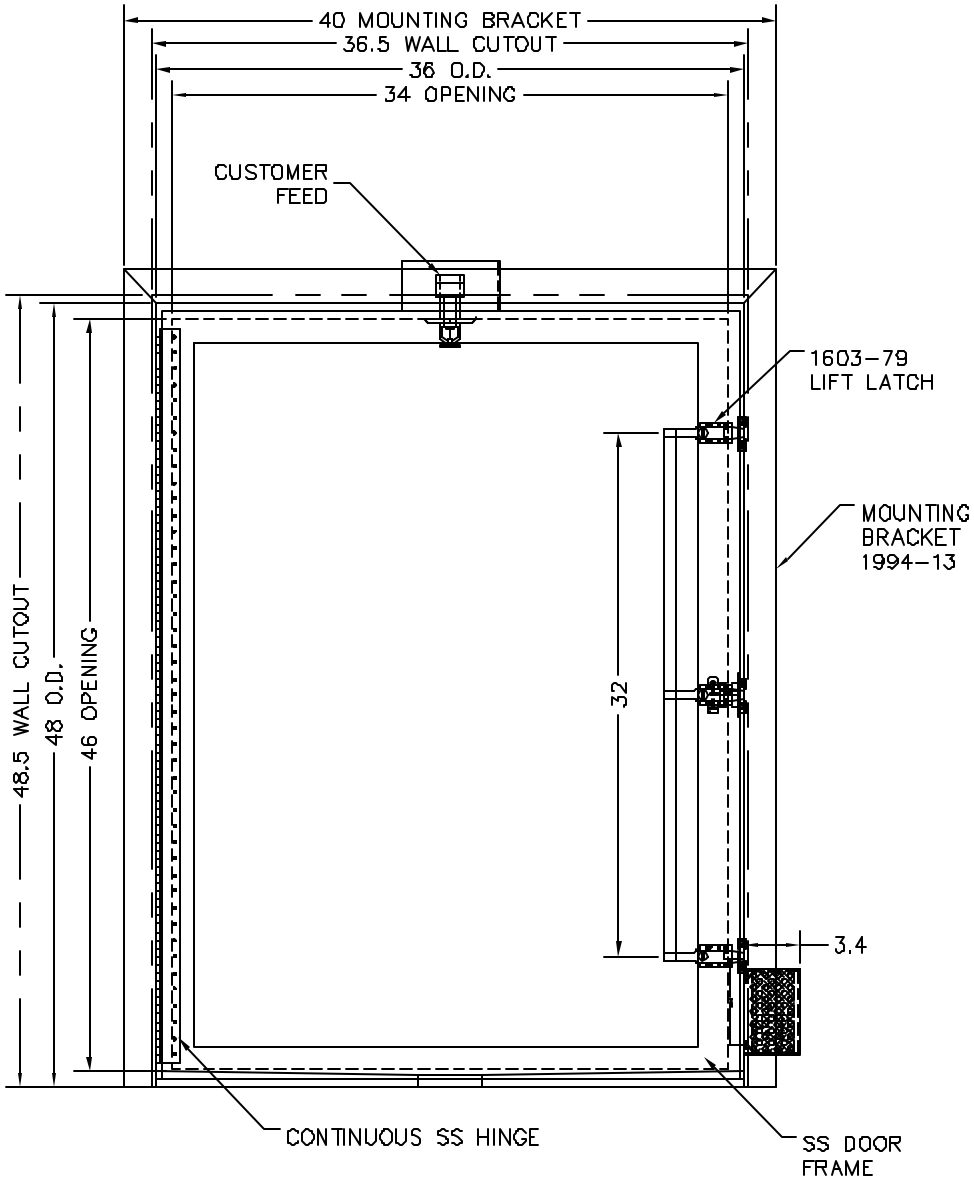

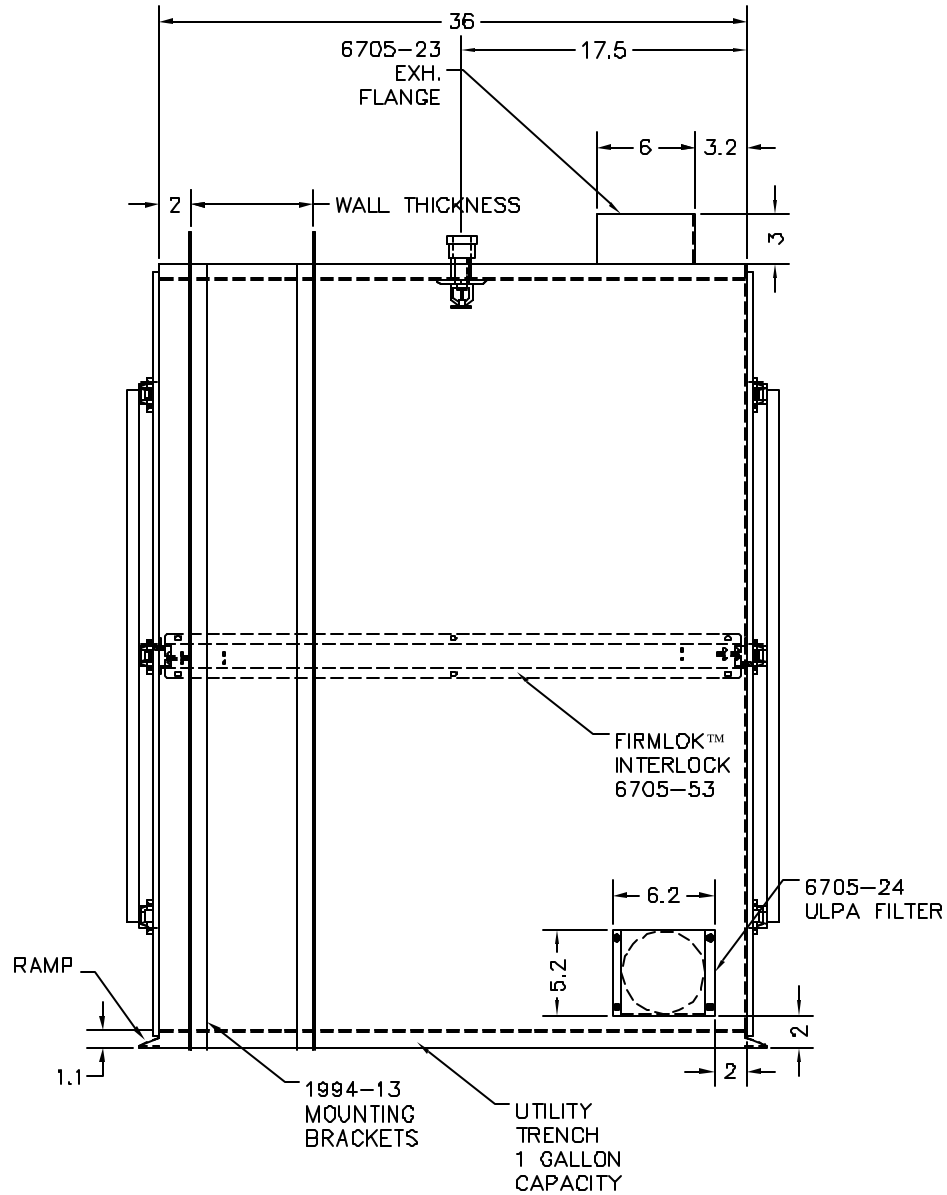

LTR	DESCRIPTION	DATE	APPD
NC	INITIAL RELEASE	1/22/07	JY

CONFIG	DESCRIPTION
MATERIAL SPEC.	FINISH SPEC.
304 SS STAINLESS STEEL	

UNLESS OTHERWISE SPECIFIED, DIMENSIONS ARE IN INCHES
TOLERANCES ON:
.XX DECIMALS ± .03 X° ± 1°
.XXX DECIMALS ± .010 X/X ± 1/64

SIGNATURES		DATE
DRAWN:	YACKLE	1/22/07
ENGR:		

Terra Universal

PROPRIETARY & CONFIDENTIAL
ALL RIGHTS RESERVED BY
TERRA UNIVERSAL
DISCLOSURE OR COPYING PROHIBITED

TITLE
PASS THROUGH, SS, FLOOR MOUNT
36" x 36" x 48"H

NEXT ASSY	USED ON	SCALE		
	140024	NONE	P/T	SHEET 1 OF 2

A 1992-86A-58584