DWG NO: 2636-01-XXXX

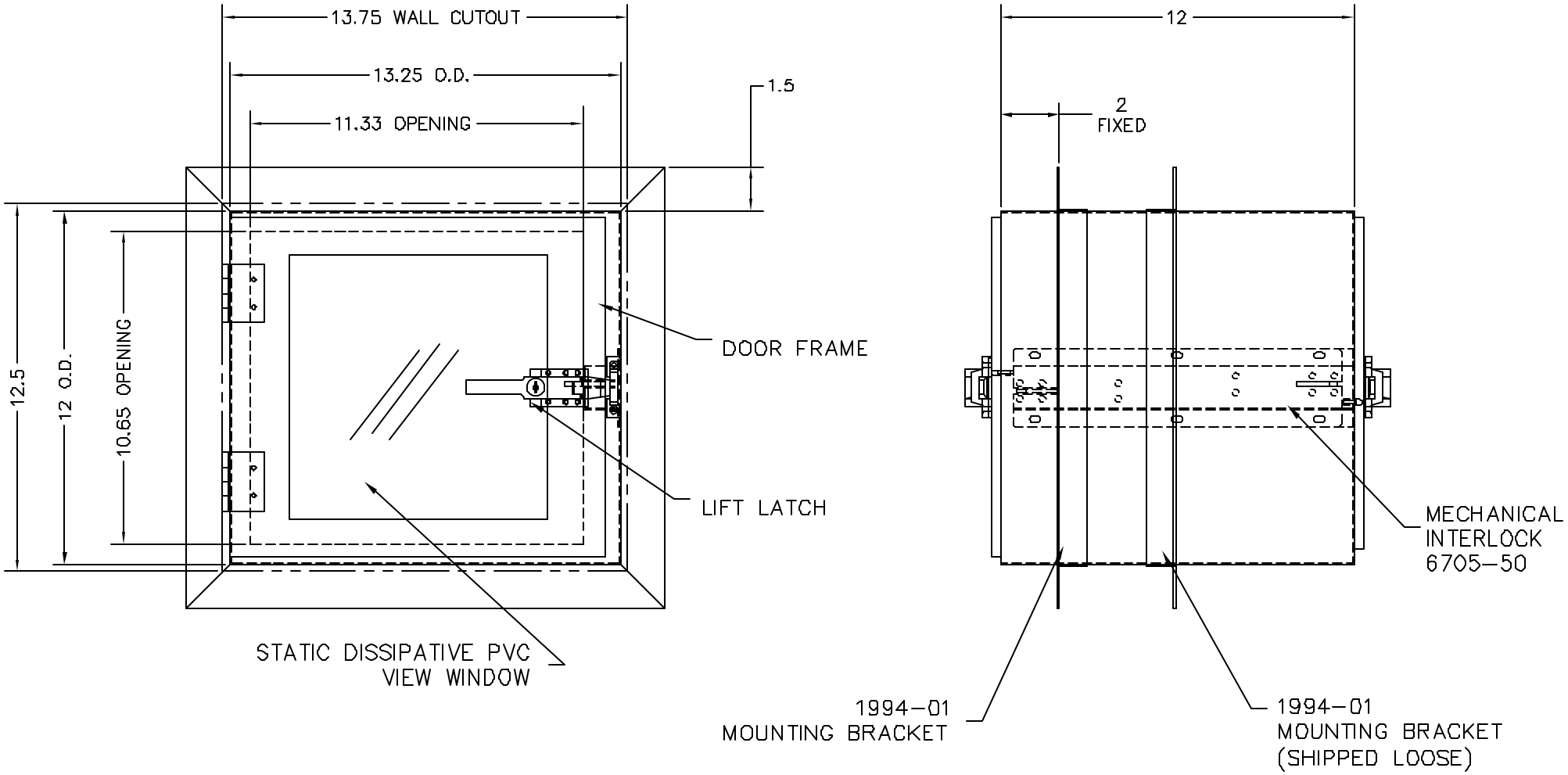

LTR	DESCRIPTION	DATE	APPD
NC	INITIAL RELEASE		

CONFIG	DESCRIPTION
MATERIAL SPEC.	FINISH SPEC.
SS	

UNLESS OTHERWISE SPECIFIED, DIMENSIONS ARE IN INCHES
TOLERANCES ON
.XX DECIMALS ± .03 X° ± 1°
.XXX DECIMALS ± .010 X/X ± 1/64

SIGNATURES		DATE
DRAWN:	KENNEDY	07-11-05
ENGR:		

Terra Universal

PROPRIETARY & CONFIDENTIAL
ALL RIGHTS RESERVED BY
TERRA UNIVERSAL
DISCLOSURE OR COPYING PROHIBITED

TITLE SS PASS THROUGH WALL MOUNT 12" x 12" x 12"

A 2636-01-XXXX

NEXT ASSY | USED ON | SCALE NONE | P/T | SHEET 1 OF 1