DWG NO: 2636-01EP-49256

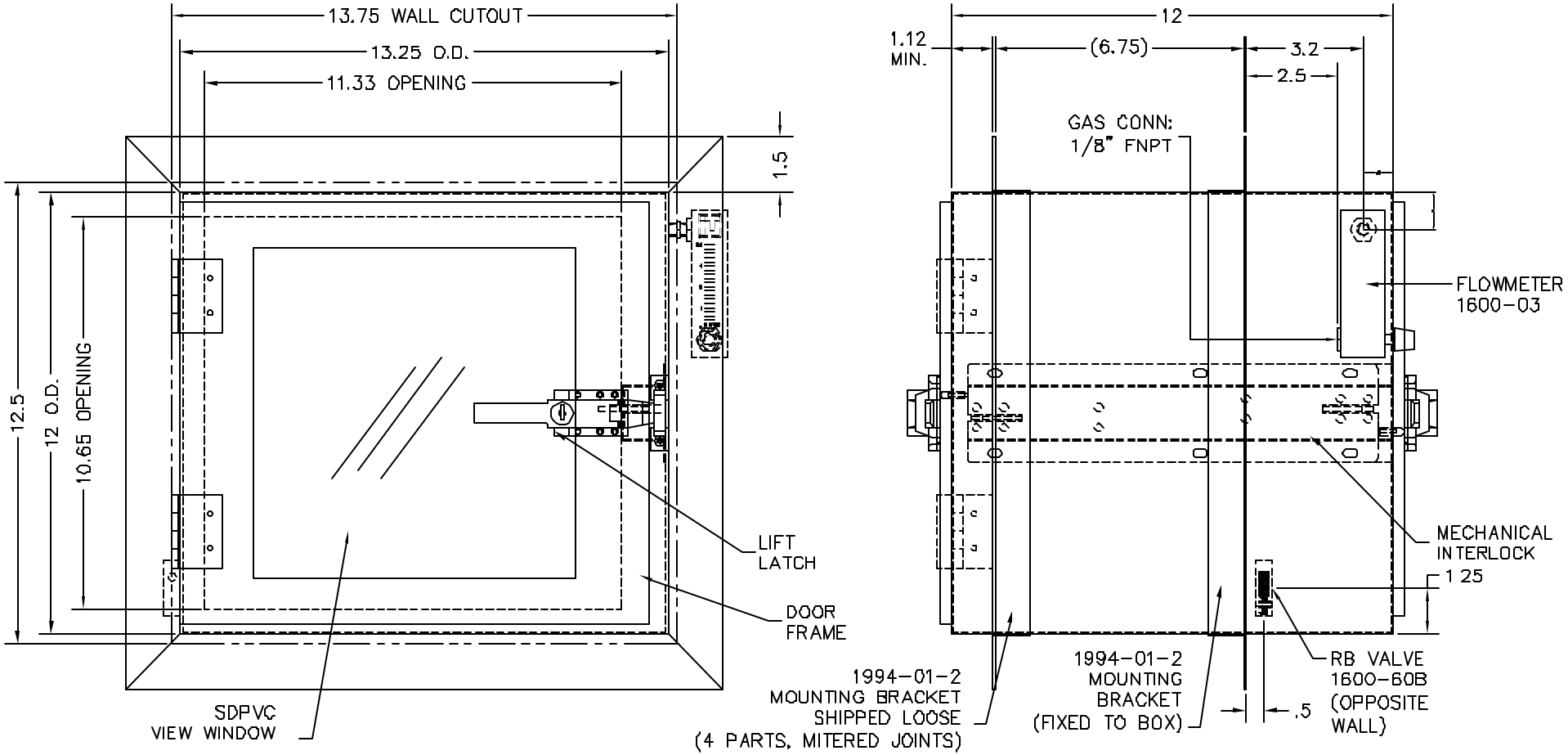

LTR	DESCRIPTION	DATE	APPD
NC	INITIAL RELEASE		

CONFIG	DESCRIPTION

MATERIAL SPEC.	FINISH SPEC
SS	EP

UNLESS OTHERWISE SPECIFIED, DIMENSIONS ARE IN INCHES
TOLERANCES ON
.XX DECIMALS ± .03 X° ± 1°
.XXX DECIMALS ± .010 X/X ± 1/64

SIGNATURES		DATE
DRAWN:	TUCKER	08.20.05
ENGR:		

Terra Universal

PROPRIETARY & CONFIDENTIAL
ALL RIGHTS RESERVED BY
TERRA UNIVERSAL
DISCLOSURE OR COPYING PROHIBITED

TITLE EP, SS PASS THROUGH WALL MOUNT CUSTOM

NEXT ASSY	USED ON	SCALE	
	44B24	NONE	P/T

A 2636-01EP-49256

SHEET 1 OF 2