DWG NO: 1992-24-48093

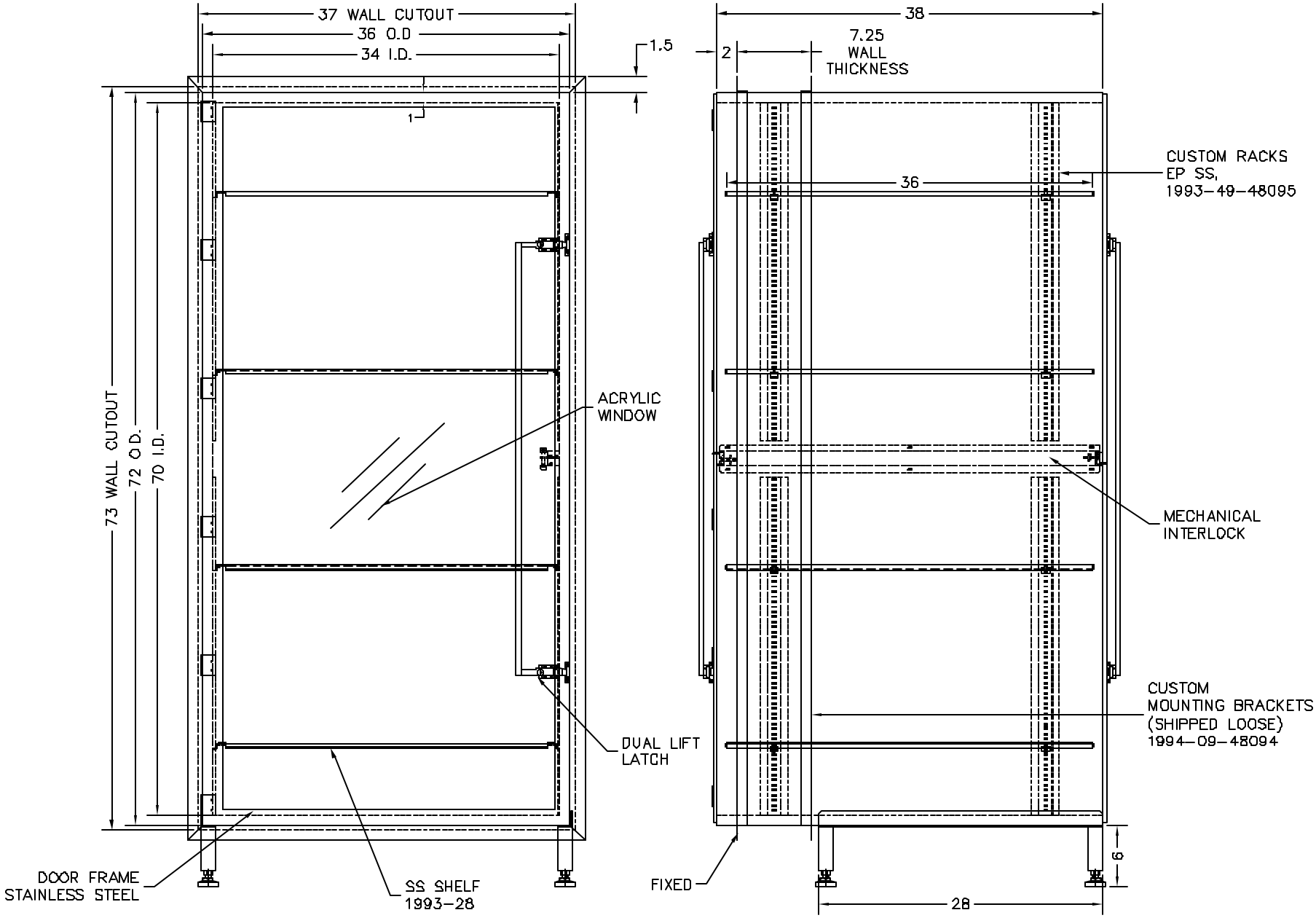

LTR	DESCRIPTION	DATE	APPD
NC	INITIAL RELEASE		

CONFIG	DESCRIPTION
MATERIAL SPEC.	FINISH SPEC
NONCONDUCTIVE LAMINATE	

UNLESS OTHERWISE SPECIFIED, DIMENSIONS ARE IN INCHES
TOLERANCES ON
.XX DECIMALS ± .03 X° ± 1°
.XXX DECIMALS ± .010 X/X ± 1/64

SIGNATURES		DATE
DRAWN:	VEGA	07.28.05
ENGR:	TUCKER	

Terra Universal

PROPRIETARY & CONFIDENTIAL
ALL RIGHTS RESERVED BY
TERRA UNIVERSAL
DISCLOSURE OR COPYING PROHIBITED

TITLE
CUSTOM PASS-THROUGH
NONC. LAMINATE, W/MOUNT
36" x 38" x 72"H

NEXT ASSY	USED ON	SCALE	
	128017	NONE	P/T

A 1992-24-48093

SHEET 1 OF 1