DWG NO 1992-51-19528

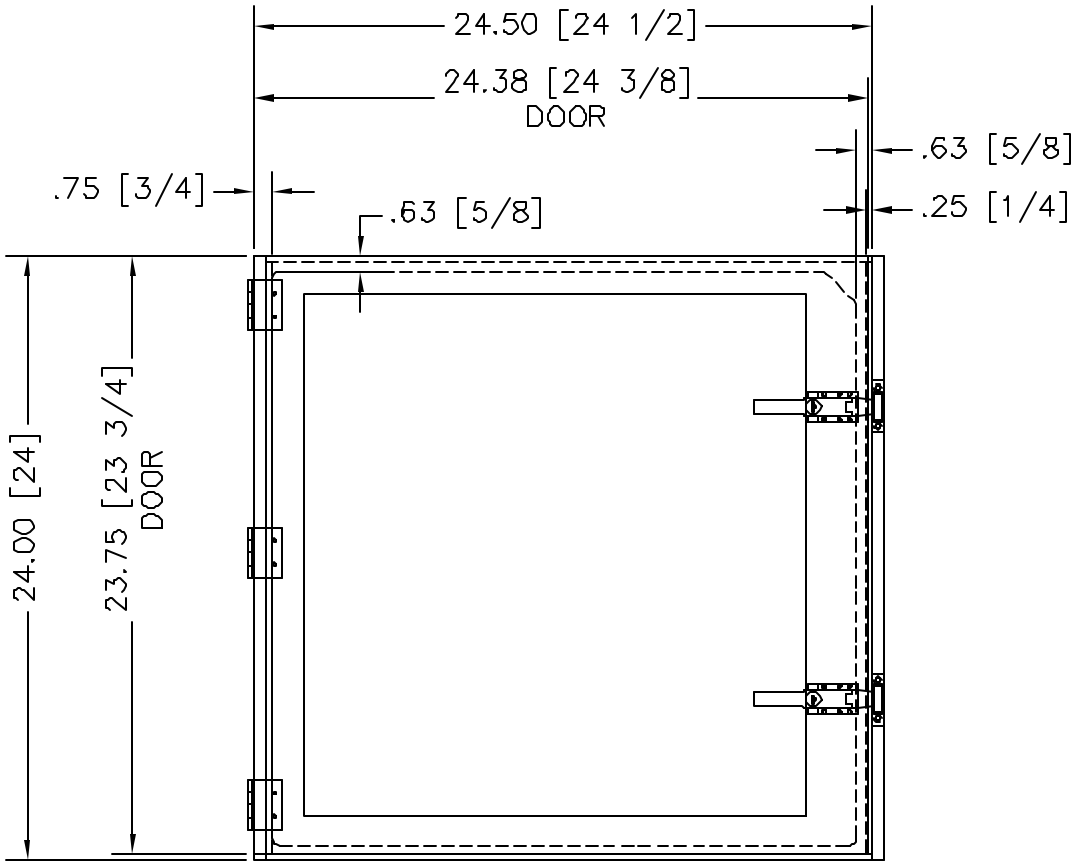

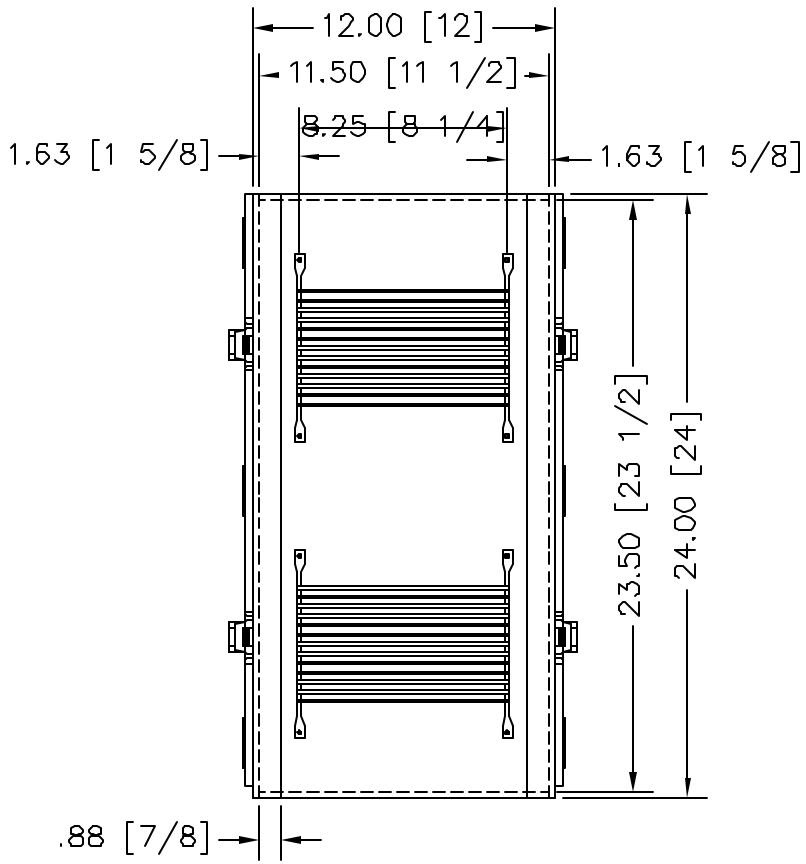

PASS- THROUGH
1/4 PLEXIGLASS
1992-51

ENGINEERING APPROVAL

ENGINEERING APPROVAL

CUSTOMER APPROVAL

LTR	DESCRIPTION	DATE	APPD
NC	INITIAL RELEASE		EDT

CONFIG	DESCRIPTION
-1	

MATERIAL SPEC.	FINISH SPEC.
1/4" THK ACYRLIC CLEAR	

UNLESS OTHERWISE SPECIFIED, DIMENSIONS ARE IN INCHES
TOLERANCES ON:
.XX DECIMALS ± .03 X'± 1°
.XXX DECIMALS ± .010 X/X ± 1/64

SIGNATURES		DATE
DRAWN	RAJWANT BRAR	06-03-01
ENGR:	TUCKER	

Terra Universal

TITLE
PASS THROUGH, ACYRLIC
W24" X D12" X H24"

NEXT ASSY	USED ON		
	78834	A	1992-51-19528

SCALE	NONE	PASS THROUGH	SHEET 1 OF 1