DWG NO: 1992-20-48083

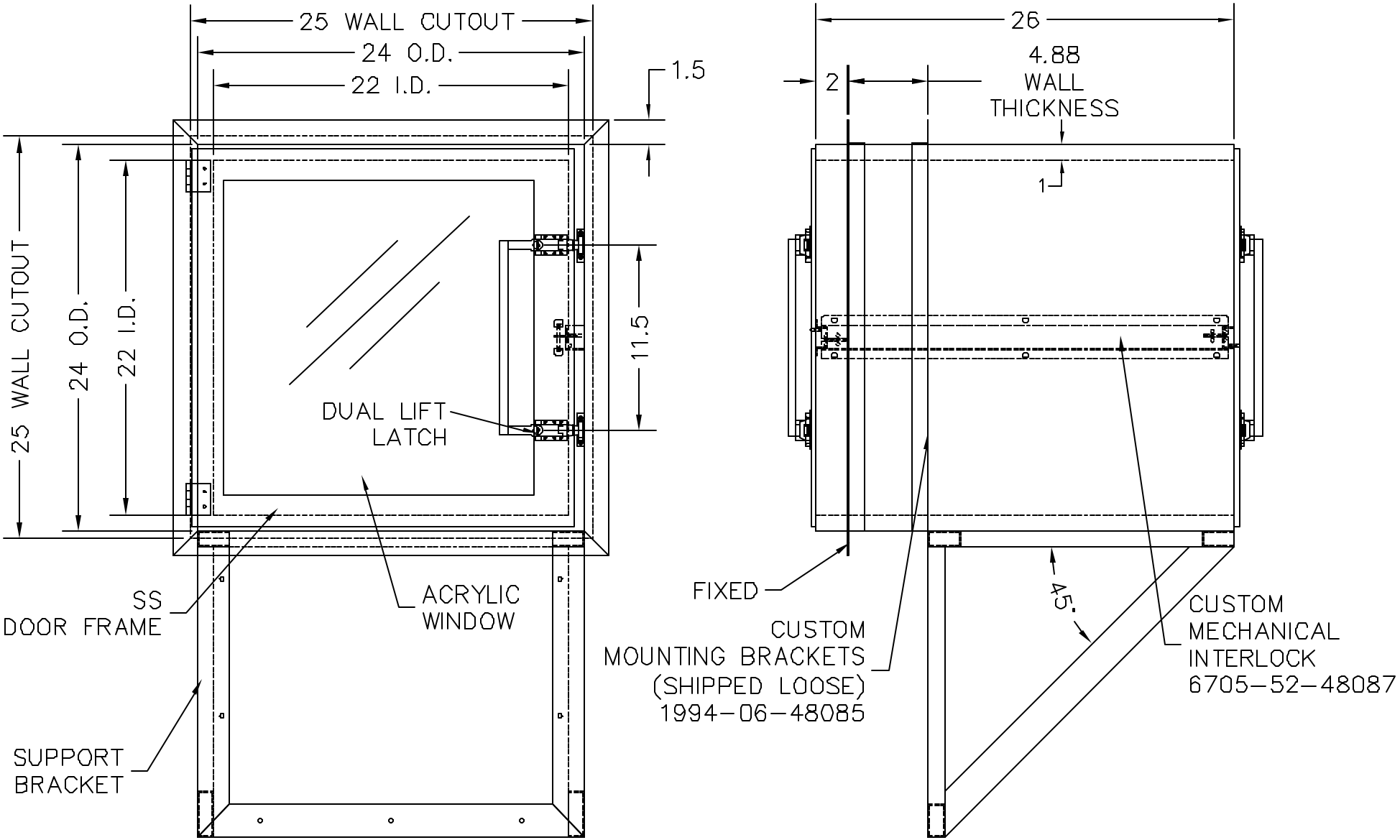

LTR	DESCRIPTION	DATE	APPD
NC	INITIAL RELEASE		
A	ADDED SUPPORT BRACKET	08.15.05	SV

CONFIG	DESCRIPTION
MATERIAL SPEC.	FINISH SPEC
NONCONDUCTIVE LAMINATE	

UNLESS OTHERWISE SPECIFIED, DIMENSIONS ARE IN INCHES
TOLERANCES ON
.XX DECIMALS ± .03 X° ± 1°
.XXX DECIMALS ± .010 X/X ± 1/64

SIGNATURES		DATE
DRAWN.	VEGA	07.28.05
ENGR:	TUCKER	

Terra Universal

PROPRIETARY & CONFIDENTIAL
ALL RIGHTS RESERVED BY
TERRA UNIVERSAL
DISCLOSURE OR COPYING PROHIBITED

NEXT ASSY | USED ON 128017

TITLE CUSTOM PASS-THROUGH NONC. LAMINATE, W/MOUNT 24" x 26" x 24"H

A 1992-20-48083

SCALE NONE | P/T | SHEET 1 OF 1