DWG NO 1993-00-5751

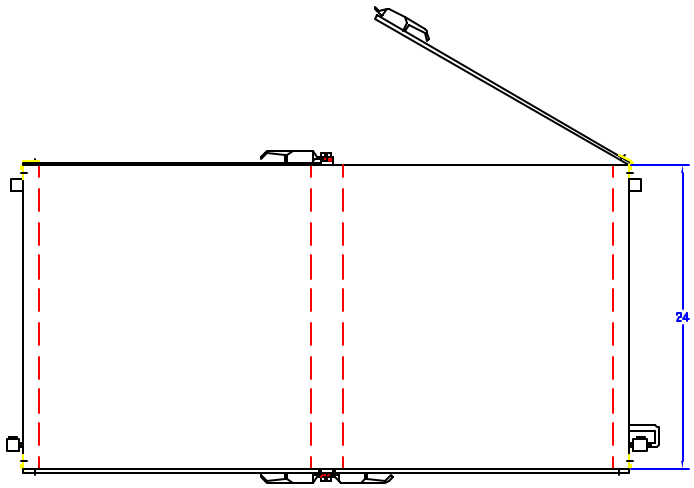

LTR	DESCRIPTION	DATE	APPD
NO	INITIAL RELEASE		

DATE	DESCRIPTION
MATERIAL SPEC	FINISH SPEC

UNLESS OTHERWISE SPECIFIED DIMENSIONS ARE IN INCHES
TOLERANCES ON:
.XX ±.03 .XXX ±.010 X° ± 1°
.XXX ±.010 .XXXX ±.005 X'/' ± 1/64

SIGNATURES DATE
DRAWN TAMER
CHECK

Terra Universal

TITLE PASS-THROUGH CUSTOM LAMINATE 24"x24"x18"

A 1993-00-5751

NEXT ASSY USED ON SCALE NONE PASS-THRU SHEET 1 OF 2

DWG NO 1993-00-5751

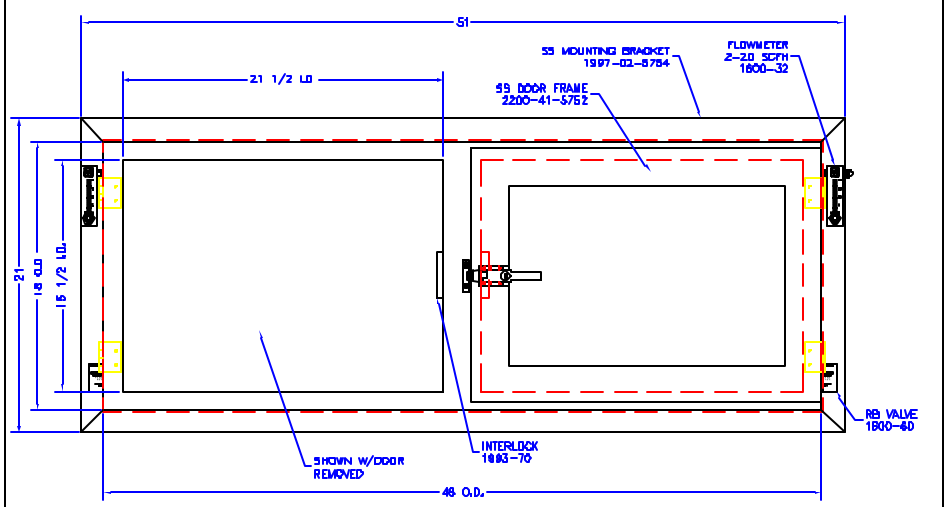

LTR	DESCRIPTION	DATE	APPD
NO	INITIAL RELEASE		

DATE	DESCRIPTION
MATERIAL SPEC	FINISH SPEC

UNLESS OTHERWISE SPECIFIED DIMENSIONS ARE IN INCHES
TOLERANCES ON:
.XX ±.03 .XXX ±.010 X° ± 1°
.XXX ±.010 .XXXX ±.005 X'/' ± 1/64

SIGNATURES DATE
DRAWN TAMER
CHECK

Terra Universal

TITLE PASS-THROUGH CUSTOM LAMINATE 24"x24"x18"

A 1993-00-5751

NEXT ASSY USED ON SCALE NONE PASS-THRU SHEET 2 OF 3

DWG NO 1993-00-5751

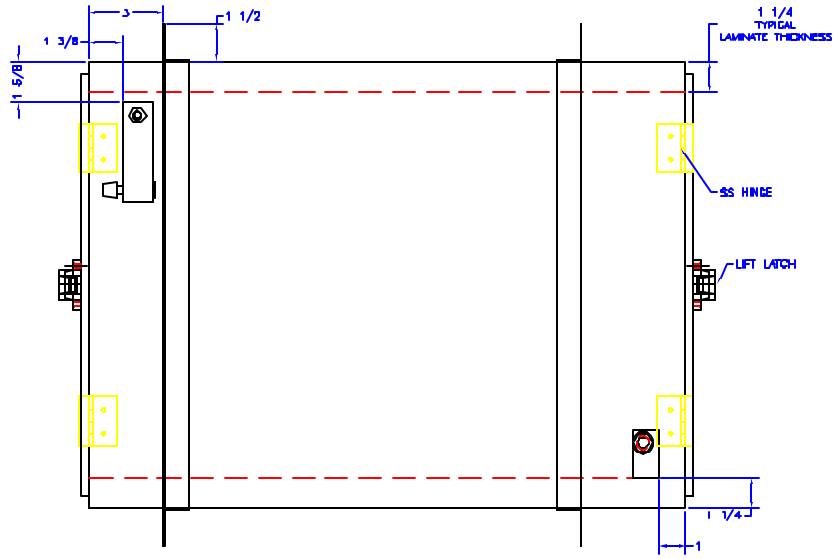

LTR	DESCRIPTION	DATE	APPD
NO	INITIAL RELEASE		

DATE	DESCRIPTION
MATERIAL SPEC	FINISH SPEC

UNLESS OTHERWISE SPECIFIED DIMENSIONS ARE IN INCHES
TOLERANCES ON:
.XX ±.03 .XXX ±.010 X° ± 1°
.XXX ±.010 .XXXX ±.005 X'/' ± 1/64

SIGNATURES DATE
DRAWN TAMER
CHECK

Terra Universal

TITLE PASS-THROUGH CUSTOM LAMINATE 24"x24"x18"

A 1993-00-5751

NEXT ASSY USED ON SCALE NONE PASS-THRU SHEET 3 OF 3