DWG NO: 2636-63-58471

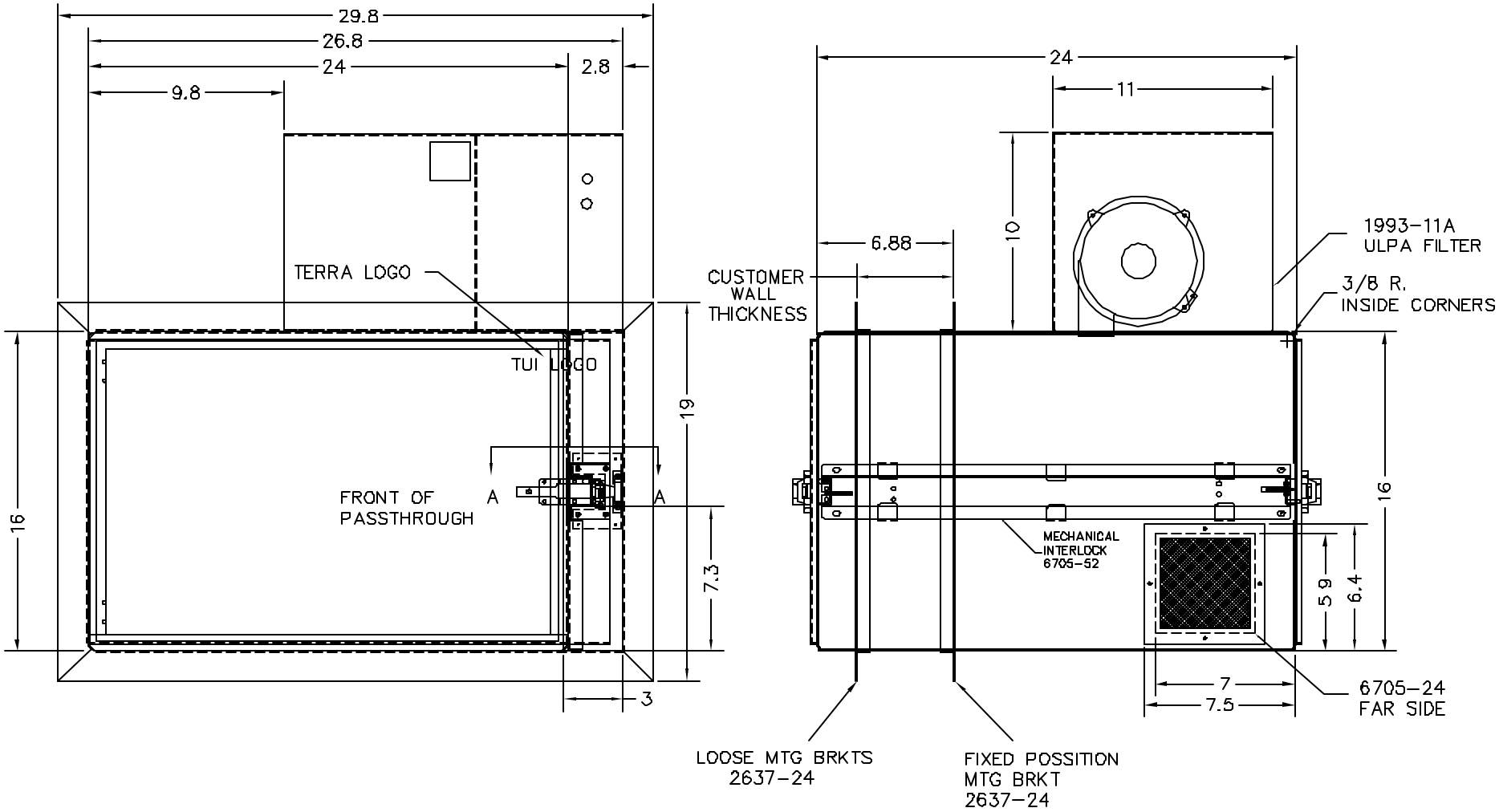

LTR	DESCRIPTION	DATE	APPD
NC	INITIAL RELEASE	01/02/07	ER

CONFIG	DESCRIPTION

MATERIAL SPEC.	FINISH SPEC.
304SS SDPVC	

UNLESS OTHERWISE SPECIFIED, DIMENSIONS ARE IN INCHES
TOLERANCES ON:
.XX DECIMALS ± .03 X° ± 1°
.XXX DECIMALS ± .010 X/X ± 1/64

SIGNATURES		DATE
DRAWN:	ERIC R	1/02/07
ENGR	2636-63-58471 2636-63-58471	

Terra Universal

PROPRIETARY & CONFIDENTIAL
ALL RIGHTS RESERVED BY
TERRA UNIVERSAL
DISCLOSURE OR COPYING PROHIBITED

NEXT ASSY	USED ON
	139028

TITLE
SERIES 200 PASS
BIOSAFE WALL MOUNT
26.8"W X 24"D X 16"H

A 2636-63-58471

SCALE NONE | PT | SHEET 1 OF 23