DWG NO 2636-06-48949-1revA

NOTE- MATERIAL FOR THIS ORDER HAS BEEN ORDERED
BY GLENNA ON 01-20-06
10 SHEETS 18 GA 316 SS 36"X120"

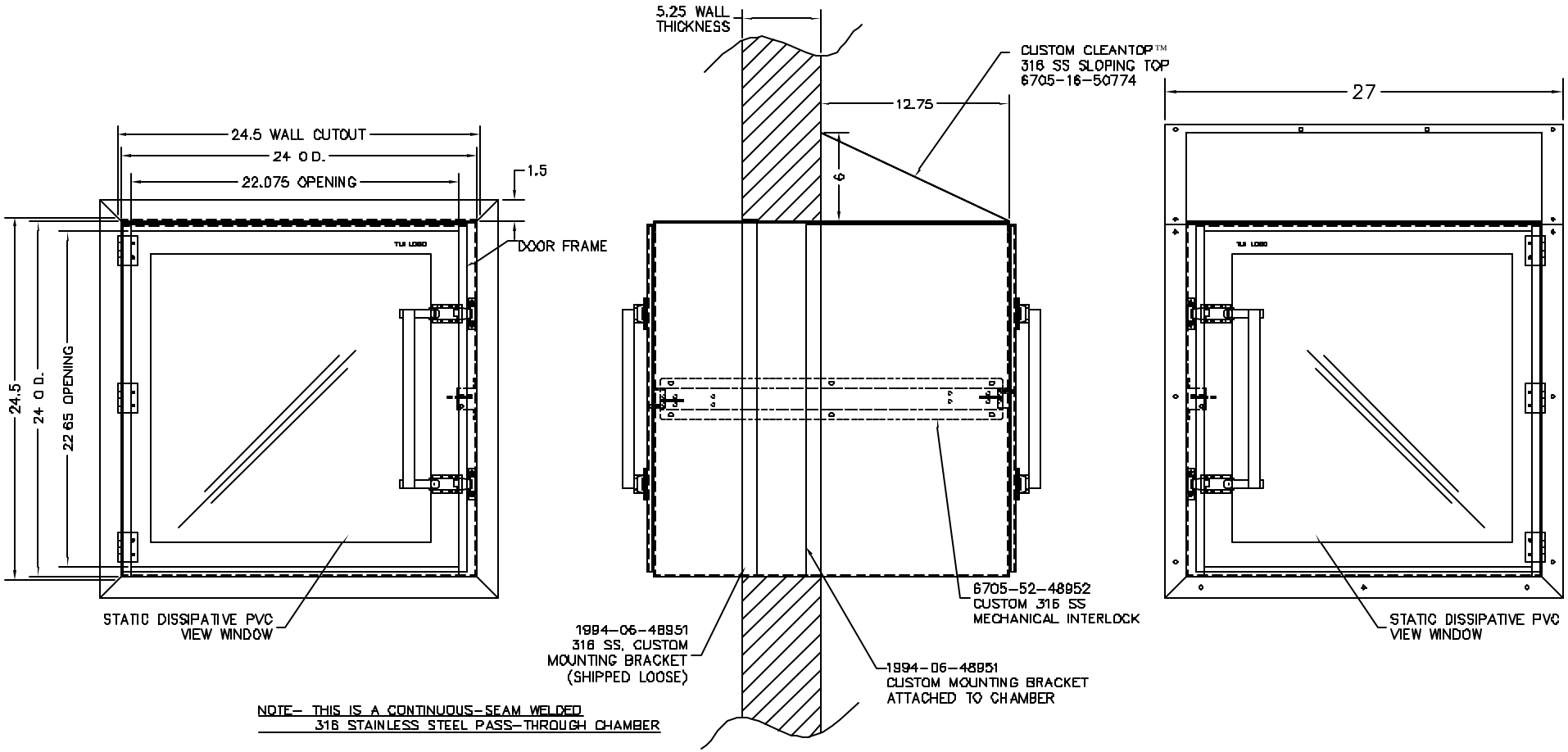

NOTE- THIS IS A CONTINUOUS-SEAM WELDED
316 STAINLESS STEEL PASS-THROUGH CHAMBER

LTR	DESCRIPTION	DATE	APPD
NC	INITIAL RELEASE		

CONFIG	DESCRIPTION
-1	
MATERIAL SPEC.	FINISH SPEC.
316 STAINLESS STEEL	

UNLESS OTHERWISE SPECIFIED, DIMENSIONS ARE IN INCHES
TOLERANCES ON
.XX DECIMALS ± .08 X°±
.XXX DECIMALS ± X/X ±

SIGNATURES		DATE
DRAWN:	JOSE SORIANO	12.06.05
ENGR	TUCKER	

Terra Universal

PROPRIETARY & CONFIDENTIAL
ALL RIGHTS RESERVED BY
TERRA UNIVERSAL
DISCLOSURE OR COPYING PROHIBITED

TITLE
CUSTOM PASS THROUGH
316 SS, WALL MOUNTED
24"W x 24"D x 24"H

NEXT ASSY	USED ON	SCALE	NONE	PASS THROUGH	SHEET 1 OF 7
	130823	2636-06-48949-1revA			